The Harman Kardon Model HK6650R

Manual 186A

INTEGRATED AMPLIFIER

Technical Manual

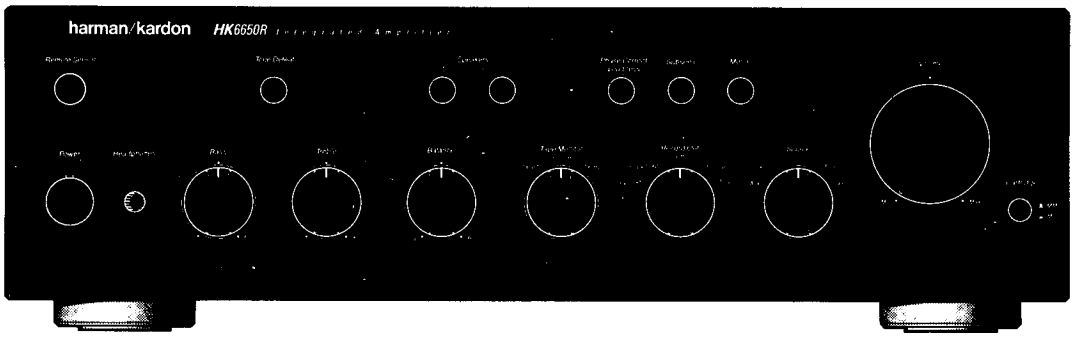

The following marks found in the parts list of this manual identify the models as follows.

- **BK : North America area model Black version**
- **G : German model**
- **GB : German model Black version**
- **IB : International model Black version**
- **WB : Asia/Oceania model Black version**

CONTENTS

SPECIFICATIONS 2
LEAKAGE TEST 2
DISASSEMBLY PROCEDURES 3
POWER CORD REPLACEMENT 3
CONTROLS AND FUNCTIONS 4
GENERAL UNIT PARTS LIST 6
GENERAL UNIT 7
ALIGNMENT PROCEDURES 8
BLOCK DIAGRAM 8
P. C. BOARDS 9
ELECTRICAL PARTS LIST 13
SCHEMATIC DIAGRAMS 21
WIRING DIAGRAM 25

HK6650R

harman/kardon

Parts and Service Office
240 Crossways Park West,Woodbury,N.Y. 11797
1112-0240A152 P-129203 1500 Printed in Japan

SPECIFICATIONS

	Nominal	Limit
RMS Output Power		
8 Ω, 1 kHz THD 0.08 %	105 W	≥100 W BK G GB WB
	77.5 W	≥70 W IB
4 Ω, 1 kHz THD 0.1 %	116 W	≥100 W
High-instantaneous Current Capability (HCC)	80 A	≥70 A BK G GB WB
	72 A	≥65 A IB
Half Power Bandwidth	<10 Hz~100 kHz	<10 Hz~70 kHz
Frequency Response (at – 3 dB down)	0.25 Hz~280 kHz	<1 Hz~≥250 kHz BK IB WB
	0.25 Hz~240 kHz	<1 Hz~≥200 kHz G GB
Input Sensitivity		
CD	135 mV	±25 mV
Phono (MM)	2.2 mV	±0.3 mV BK IB WB
	2.3 mV	±0.3 mV G GB
Phono (MC)	130 μV	±20 μV BK IB WB
	140 μV	±20 μV G GB
Signal to Noise Ratio		
CD	76 dB	≥70 dB BK G GB WB
	79 dB	≥75 dB IB
Phono (MM)	75 dB	≥65 dB BK G GB WB
	78 dB	≥73 dB IB
Phono (MC)	73 dB	≥65 dB BK G GB WB
	76 dB	≥72 dB IB
Channel Separation (at 10 kHz)		
CD	52 dB	≥43 dB
Phono (MM)	54 dB	≥43 dB
Phono (MC)	47 dB	≥43 dB BK G GB WB
	50 dB	≥43 dB IB
IM Distortion Ratio	0.027 %	≤0.1 %
Damping Factor (at 1 kHz)	75	≥65 BK G GB WB
	84	≥65 IB

	Nominal	Limit
Tone Control Characteristics		
Bass (at 50 Hz)		
Boost	10 dB	±2 dB
Cut	10 dB	±2 dB
Treble (at 10 kHz)		
Boost	10 dB	±2 dB
Cut	10 dB	±2 dB
Phase Correct Loudness (at 50 Hz)	6 dB	±3 dB
Filters		
Subsonic 15 Hz	–3 dB	±1 dB BK IB WB
	–6 dB	±1 dB G GB
DC Output Voltage		
L channel	0 mV	±60 mV
R channel	0 mV	±60 mV
RIAA Equalization at Tape Out (20 Hz/20 kHz) (No load)	+0.2 dB	±0.5 dB / 0 dB ±0.5 dB
Phono Over load (No load)		
Phono (MM)	200 mV	≥160 mV
Phono (MC)	11 mV	≥8 mV
Dimensions (W × H × D)	17-1/2" × 5-1/4" × 15-11/16" (443 × 134 × 398 mm)	
Weight	24.7 lbs (11.2 kg)	
Power Supplies		
North America area model	AC 120, 60 Hz	
International model	AC 230/240 V, 50/60 Hz	
Power Consumption		
North America area model	220 W (290VA)	
International model	250 W	

These specifications are service target specs.

Specifications and components are subject to change without notice. Overall performance will be maintained or improved.

LEAKAGE TEST (FOR SERVICE ENGINEERS IN THE U.S.A)

Before returning the unit to the user, perform the following safety checks:

1. Inspect all lead dress to make certain that leads are not pinched or that hardware is not lodged between the chassis and other metal parts in the unit.
2. Be sure that any protective devices such as nonmetallic control knobs, insulating fishpapers, cabinet backs, adjustment and compartment covers or shields, isolation resistor-capacity networks, mechanical insulators, etc. which were removed for servicing are properly reinstalled.
3. Be sure that no shock hazard exists; check for leakage current using Simpson Model 229 Leakage Tester, standard equipment item No. 21641, RCA Model WT540A or use alternate method as follows: Plug the power cord directly into a 120-volt AC receptacle (do not use an Isolation Transformer for this test). Using two clip leads, connect a 1500 Ohm, 10-watt resistor paralleled by a 0.15 μF capacitor, in series with all exposed metal cabinet parts and a known earth ground, such as a water pipe or conduit. Use a VTVM or VOM with 1000 Ohms per volt, or higher sensitivity to measure the AC voltage drop across the resistor. (See Diagram.) Move the resistor connection to each exposed metal part having a return path to the chassis (antenna, metal, cabinet, screw heads, knobs and control shafts, escutcheon, etc.) and measure the AC voltage drop across the resistor. (This test should be performed with the power switch in both the On and Off positions.)
   A reading of 0.35 volt RMS or more is excessive and indicates a potential shock hazard which must be corrected before returning the unit to the owner.

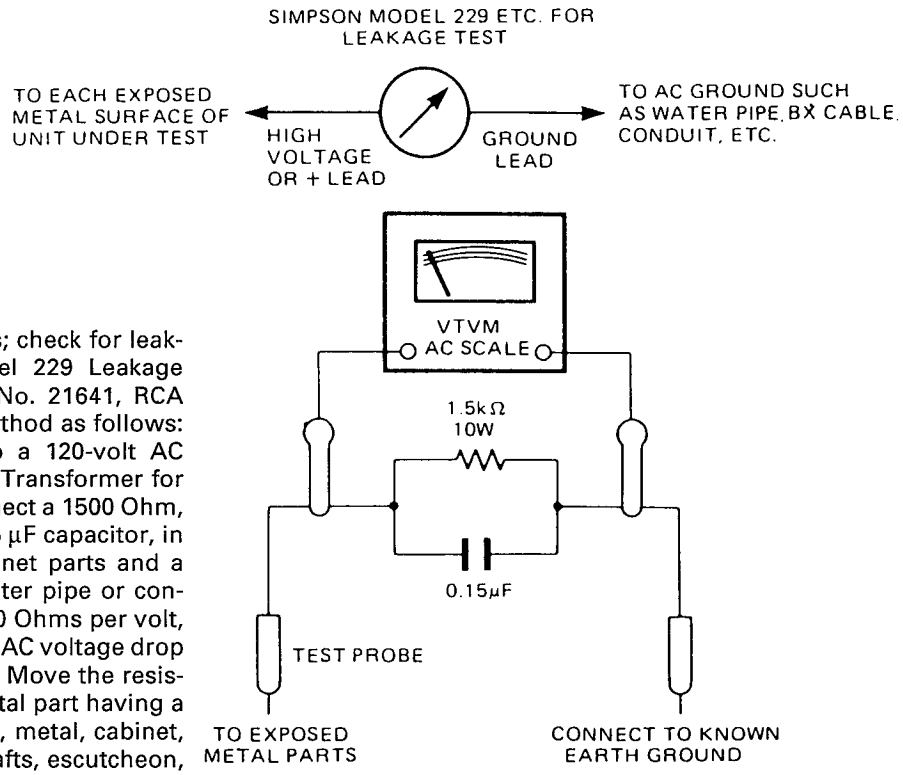

DISASSEMBLY PROCEDURES (REFER TO PAGES 7 AND 25)

1 CABINET TOP (131) REMOVAL

Remove 8 screws (A) and then remove the Cabinet Top (131).

2 FRONT PANEL ASS'Y (AA) REMOVAL

1. Remove the Cabinet Top (131), referring to the previous step 1.
2. Remove 5 screws (B) and then remove the Front Panel Ass'y (AA).

3 MAIN P. C. BOARD (PCB-1) REMOVAL

1. Remove 11 screws (C) and then remove the Cabinet Bottom Ass'y (AC).
2. Remove the Front Panel Ass'y (AA), referring to the previous step 2.
3. Remove 7 screws (D) and then remove the Main P. C. Board (PCB-1) with the Heat Sink (181). At this time, unsolder the lead wires connected to the Main P. C. Board (PCB-1).

4 POWER SUPPLY P. C. BOARD (PCB-2) REMOVAL

1. Remove 11 screws (C) and then remove the Cabinet Bottom Ass'y (AC).
2. Remove the Front Panel Ass'y (AA), referring to the previous step 2.
3. Pull out the 2 Shafts (216).
4. Remove 5 screws (E) and then remove the Power Supply P. C. Board (PCB-2). At this time, unsolder the lead wires connected to the Power Supply P. C. Board (PCB-2).

5 POWER SWITCH P. C. BOARD (PCB-3)

1. Remove the Front Panel Ass'y (AA), referring to the previous step 2.
2. Pull out the 2 Levers (213).
3. Remove 3 screws (F), then remove the Power Switch P. C. Board (PCB-3). If necessary unsolder the lead wires.

6 TONE 1 P. C. BOARD (PCB-5) REMOVAL

1. Remove the Front Panel Ass'y (AA), referring to the previous step 2.
2. Pull out the 2 Shafts (216).
3. Pull out the 6 Rotary Knobs (152), Power Push Button (146) and Levers (213).
4. Remove 3 screws (G) and 4 screws (H) mounting the Metal Fitting (165), then remove the Metal Fitting (165) with the Equalizer P. C. Board (PCB-10).
5. Remove the Metal Fixture (I) fixing the Headphones P. C. Board (PCB-12) and then remove it.
6. Remove 3 hexagon nuts (J) and remove 10 screws (K).
7. Remove 7 screws (L) and the Chassis (161), then the Tone 1 P. C. Board (PCB-5), Tone 2 P. C. Board (PCB-6), Volume P. C. Board (PCB-7) and Remote P. C. Board (PCB-14) can be removed. Unsolder the lead wires if necessary when removing each P. C. Board.

POWER CORD REPLACEMENT (FOR SERVICE ENGINEERS OTHER THAN NORTH AMERICA)

In order to prevent fire or shock hazard when replacing the power cord, follow the procedure below to replace the parts with the standard supply parts.

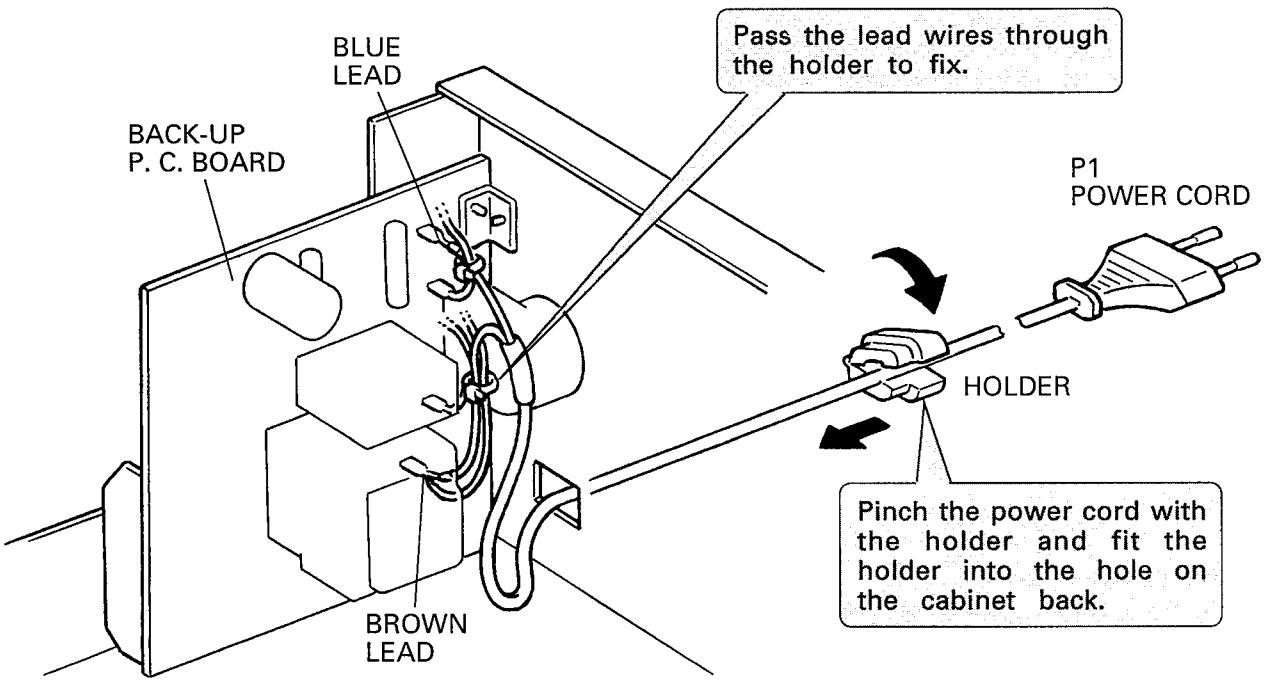

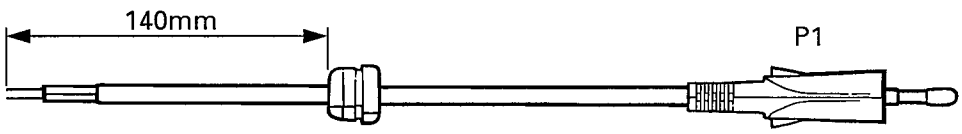

CONTROLS AND FUNCTIONS

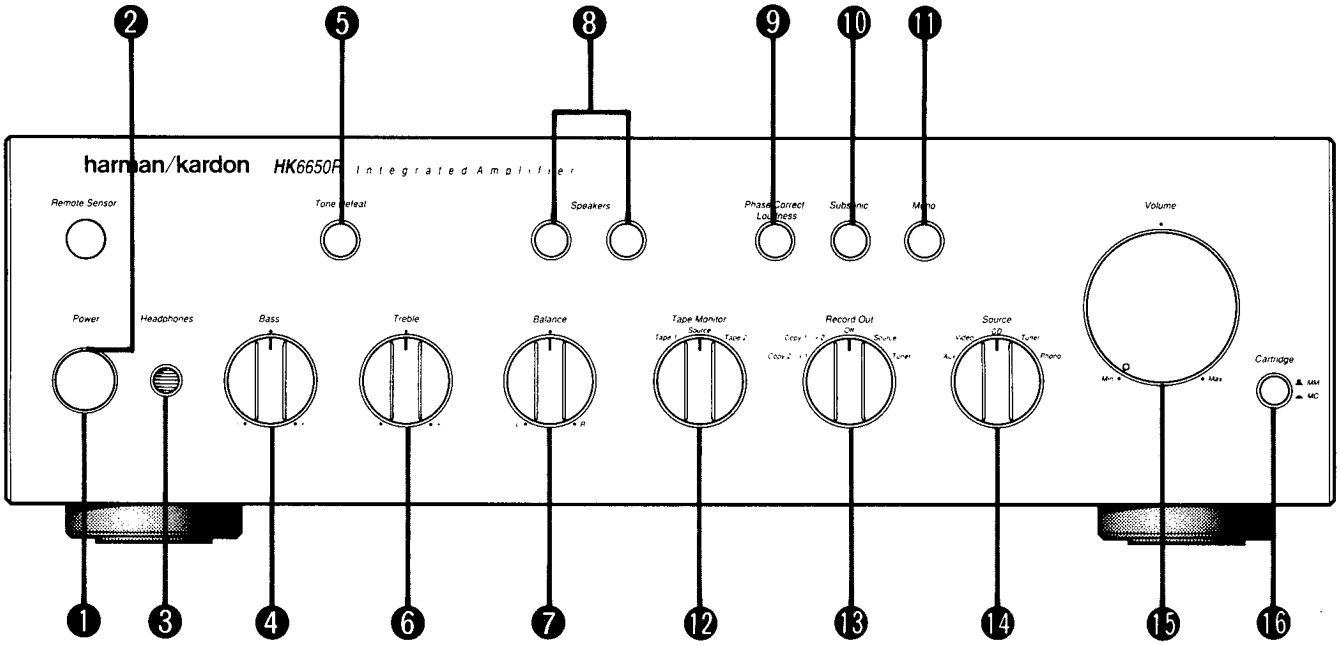

❶ *POWER Switch*

Press this switch to turn the unit "On". Pressing it again will turn the unit off. While it is in the "On" position, the remote control can switch the unit between the "On" and "Standby" modes. The remote control is inactive when this switch is "Off". Note that this unit will draw a small amount of power when this switch is "Off".

❷ *POWER Indicator*

With the power switch is in the "On" position, this indicator is illuminated in green when the unit is "On", and is illuminated in amber when the unit is in "Standby". This indicator will not illuminate when the power switch is "Off".

❸ *HEADPHONES Jack*

Stereo headphones with a standard 1/4 inch plug can be connected to this jack. When the *SPEAKERS* switches are in the *Off* position, sound can still be obtained via the headphone jack.

❹ *BASS Control Knob*

This knob controls the low frequency sound level. Turn it clockwise to boost or counterclockwise to reduce the low frequency sound level.

❺ *Tone Defeat Switch*

This switch is used to make the frequency characteristic flat by internally bypassing the tone control circuitry. Set this switch to the OFF position (button out) when you want to use the tone control knobs.

❻ *TREBLE Control Knob*

This knob controls the high frequency sound level. Turn it clockwise to boost or counterclockwise to reduce the high frequency sound level.

❼ *BALANCE Control Knob*

This knob is used to balance the left and the right channels. Usually, it is set at the center. Turn it to the left or right to balance the sound if it seems unbalanced from the speakers or the headphones.

❽ *SPEAKERS switches*

Press "1" to activate speaker system 1. Press "2" to activate speaker system 2. Press both "1" and "2" to activate both speaker systems.
Release both "1" and "2" to listen to only to headphones.

❾ *Phase Correct Loudness Switch*

This switch activates a unique low frequency equalization circuit that provides full, natural sound from small speakers that are normally deficient in the bass region. It can also be used in place of conventional loudness compensation.

❿ *Subsonic Filter Switch*

When playing the turntable, this filter switch is used to reduce subsonic frequencies, which may excessively vibrate the speaker cones or turntable and cause feedback.

⓫ *Mono Switch*

This switch is used to combine the left and right channels and create a mono signal.

⓬ *TAPE MONITOR Selector*

This selector is used when playing a tape deck, or monitoring during recording.

Tape 1 : Select this position to play a cassette tape, or to monitor during recording on the tape deck connected to the TAPE 1 jacks.

Source : Select this position to listen to a program source other than a cassette tape.

Tape 2 : Select this position to play a cassette tape, or to monitor during recording on the tape deck connected to the TAPE 2 jacks.

⓭ *RECORD OUT Selector*

This selector is used for recording from another input on the tape deck(s) connected to the TAPE 1 and/or TAPE 2 jacks, for dubbing between two tape decks, or for recording another source independent of the *SOURCE* selector.

Tuner : In this position, the tuner signal is available at the TAPE 1 and TAPE 2 OUTPUT jacks regardless of the position of the *SOURCE* selector. This permits recording the tuner signal on the tape deck(s) connected to TAPE 1 and/or TAPE 2 jacks while using the preamplifier and power amplifier sections in another mode (Phono, CD or other sources, for example).

Source : Select this position to record the program source selected by the *SOURCE* selector in either or both of the two tape decks connected to the TAPE 1 and TAPE 2 jacks.

Off : Select this position to prevent the degradation of quality when recording function is not operated.

Copy 1 → 2 : Select this position to duplicate the cassette tape in the deck connected to the TAPE 1 jacks onto the tape in the deck connected to the TAPE 2 jacks.

Copy 2 → 1 : Select this position to duplicate the cassette tape in the deck connected to the TAPE 2 jacks onto the tape in the deck connected to the TAPE 1 jacks.

⓮ *SOURCE Selector*

This selector is used to select a program source other than a tape.

AUX : Select this position to listen to the sound from a component connected to the AUX jacks.

Video : Select this position to playback the audio signal from an audio/video component such as a camcorder, video player, or TV tuner connected to the VIDEO jacks.

CD : Select this position to listen to the sound from the compact disc player connected to the CD jacks.

Tuner : Select this position to listen to an FM or AM broadcast from the stereo tuner connected to the TUNER jacks.

Phono : Select this position to listen to a disc played on the turntable connected to the PHONO MM or MC jacks.

⓯ *VOLUME Control Knob*

This knob controls the sound level. Turning clockwise increases the sound volume, and turning counterclockwise decreases it. Set this knob at a minimum level before turning the power on or changing the sound source to protect the speakers from being damaged by a sudden high level sound.

⓰ *Cartridge Selector*

This switch selects the gain and input impedance of the phono input circuitry to match the type of phono cartridge used. Be sure to connect the turntable to the appropriate PHONO input jacks (MM for moving magnet type cartridges and MC for moving coil type cartridges), and to select that input with this selector switch.

REMOTE CONTROL SYSTEM

Using the remote control - The system remote control can switch the amplifier's power status between "on" and "standby". The amplifier's power switch must be manually set in the "on" position in order for the remote control to function.

The volume up and down buttons control the position of the amplifier's volume control knob.

In addition to this amplifier, this system remote control can operate many basic functions on the following Harman Kardon tuners, CD players and cassette decks:

HD7450	HD7600II	TD4200*	TD4800	TU9200*
HD7500	TL8500	TD4400*	DC5300*	TU9400
HD7500II	TL8600	TD4500	DC5500	TU9600
HD7600		TD4600	DC5700	

Please refer to the owner's manual for each unit for operating instructions.

* These units must be connected to the amplifier's remote control units output jacks so that the system remote control can operate them.

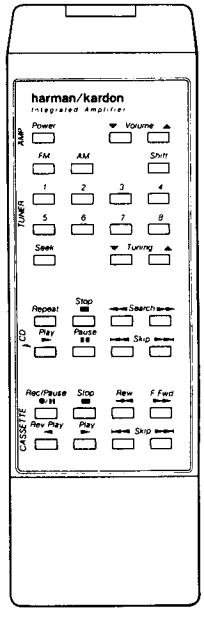

GENERAL UNIT PARTS LIST

Ref. No.	Part No.	Description
AA	A443-HK6650RA	FRONT PANEL ASSEMBLY G
AA	A443-HK6650RB	FRONT PANEL ASSEMBLY BK GB IB WB
AB	A424-HK6650RA	CABINET BACK ASSEMBLY BK
AB	A424-HK6650RC	CABINET BACK ASSEMBLY G GB IB
AB	A424-HK6650RG	CABINET BACK ASSEMBLY WB
AC	A424-HK6650RB	CABINET BOTTOM ASSEMBLY BK
BA	B219-HK6650RA	METAL FITTG ASSEMBLY BK
024	2219-8350	METAL FITTG, BACK UP P.C. BOARD (x2) G GB IB WB
025	2347-R0130062	SCREW,BND T+ (3x6 mm)(x2) G GB IB WB
026	2459-3003511	RIVET,PLASTIC, BACK UP P.C. BOARD (x2) G GB IB WB
028	1756-21906	LABEL, DBP NO. G GB
113	1117-78	SERIAL LABEL
115	1751-01018	LABEL, UL BK
116	1756-05910	LABEL, FUSE CAUTION BK
131	1414-10401	CABINET TOP
133	1423-03101	CABINET BOTTOM
134	1424-36001	CABINET BACK BK
134	1424-36002	CABINET BACK G GB IB
134	1424-36003	CABINET BACK WB
136	1443-14303	PANEL, FRONT G
136	1443-14304	PANEL, FRONT BK GB IB WB
138	1532-21101	WINDOW
139	1714-02601	NAME PLATE, BADGE G
139	1714-02602	NAME PLATE, BADGE BK GB IB WB
141	1562-08601	FRAME, L SIDE G
141	1562-08602	FRAME, L SIDE BK GB IB WB
142	1562-08701	FRAME, R SIDE G
142	1562-08702	FRAME, R SIDE BK GB IB WB
144	1732-08801	INDICATOR, POWER LED
146	1662-66901	PUSH BUTTON, POWER G
146	1662-66902	PUSH BUTTON, POWER BK GB IB WB
147	1662-67001	PUSH BUTTON, TONE DEFEAT, PHASE CORRECT LOUDNESS, SUBSONIC, MONO, CARTRIDGE G
147	1662-67002	PUSH BUTTON, TONE DEFEAT, PHASE CORRECT LOUDNESS, SUBSONIC, MONO, CARTRIDGE BK GB IB WB
148	1662-67201	PUSH BUTTON, SPEAKERS 1/2 G
148	1662-67202	PUSH BUTTON, SPEAKERS 1/2 BK GB IB WB
150	1630-04801	ROTARY KNOB, VOLUME G
150	1630-04802	ROTARY KNOB, VOLUME BK GB IB WB
152	1632-21501	ROTARY KNOB, BASS, TREBLE, BALANCE, TAPE MONITOR, RECORD OUT, SOURCE G
152	1632-21502	ROTARY KNOB, BASS, TREBLE, BALANCE, TAPE MONITOR, RECORD OUT, SOURCE BK GB IB WB
154	1568-00301	FRAME, METAL (x2)
155	1742-08301	ORNAMENT, POWER G
155	1742-08302	ORNAMENT, POWER BK GB IB WB
156	1742-08401	ORNAMENT, TONE DEFEAT, SPEAKERS 1/2, PHASE CORRECT LOUDNESS, SUBSONIC, MONO, CARTRIDGE G
156	1742-08402	ORNAMENT, TONE DEFEAT, SPEAKERS 1/2, PHASE CORRECT LOUDNESS, SUBSONIC, MONO, CARTRIDGE BK GB IB WB
158	1319-02201	LEG, BOTTOM REAR (x2)
159	1319-03301	LEG, BOTTOM FRONT (x2)
161	2211-7324	CHASSIS, FRONT

Ref. No.	Part No.	Description
163	2219-8007	METAL FITTG, TRANS
164	2219-8364	METAL FITTG, H. CENTER
165	2219-8009	METAL FITTG, EQ
166	2219-8010	METAL FITTG, TRANS SIDE
167	2219-8011	METAL FITTG, EQ SIDE
168	2219-8012	METAL FITTG, EQ CENTER
169	2219-8013	METAL FITTG, TRANS CENTER
170	2219-8366	METAL FITTG, MAIN HEAT
171	2219-8367	METAL FITTG, MAIN HEAT
172	2219-8016	METAL FITTG, POWER SWITCH
173	2219-8019	METAL FITTG, POWER P.C. BOARD
174	2219-7879	METAL FITTG, HEADPHONES
175	2219-8365	METAL FITTG, P.C. BOARD BOTTOM
176	2219-8349	METAL FITTG, P.C. BOARD METAL
177	2219-8298	METAL FITTG, REMOTE IN/OUT P.C. BOARD
180	2222-7179	HEAT SINK, DRIVER (x2)
181	2222-7312	HEAT SINK, MAIN
182	2222-7179	HEAT SINK, TONE
183	2222-7183	HEAT SINK, EQ
184	2222-7269	HEAT SINK, BRIDGE
187	2240-7395	HOLDER, PRE OUT/MAIN IN SWITCH
188	2240-7359	HOLDER, 4/8 SWITCH BK WB
189	2240-R0101	HOLDER, WIRING (x20)
190	2240-R0101	HOLDER, WIRING (x10)
191	2240-364	HOLDER, AC CORD
192	2240-7183	HOLDER, MC
193	2218-7011	BRACKET, FIX, WIRING
194	2218-R0130	BRACKET, FIX, WIRING (x2)
195	2218-89	BRACKET, FIX, HEADPHONES
196	2360-7026	BOSS, SPE, REMOTE SENSOR (x3)
198	2132-7136	SPACER, HEAT METEL (x2)
200	2224-7090	INSULATOR, HEAT METAL
203	2401-0373	WASHER, METAL (x2)
204	2401-0373	WASHER, METAL (x2)
206	2402-0374	WASHER, PLASTIC (x4)
210	2431-0151	FASTENER, BADGE (x2)
213	2672-7018	LEVER, POWER SHAFT (x2)
216	2601-7206	SHAFT, SPEAKER SHAFT (x2)
220	2651-2101726	SPRING, PUSH BUTTON (x5)
221	2440-60	NUT, SPE (x4)
222	2327-R0140102	SCREW, BND+ (4x10 mm)(x4)
223	2327-R0126044	SCREW, BND+ (2.6x4 mm)(x2)
224	2327-R0130062	SCREW, BND+ (3x6 mm)(x2)
226	2327-R0130064	SCREW, BND+ (3x6 mm)(x2) BK WB
228	2327-R0130062	SCREW, BND+ (3x6 mm)(x10)
229	2327-R0130062	SCREW, BND+ (3x6 mm)(x3)
230	2347-R0130062	SCREW, BND T+ (3x6 mm)(x2)
231	2327-R0130064	SCREW, BND+ (3x6 mm)(x2)
233	2347-R0126082	SCREW, BND T+ (2.6x8 mm)
234	2347-R0130062	SCREW, BND T+ (3x6 mm)(x20)
235	2347-R0130062	SCREW, BND T+ (3x6 mm)(x15)
236	2347-R0130064	SCREW, BND T+ (3x6 mm)(x8)
237	2347-R0130082	SCREW, BND T+ (3x8 mm)(x12)
238	2347-R0130084	SCREW, BND T+ (3x8 mm)(x17)
239	2347-R0130084	SCREW, BND T+ (3x8 mm)(x2)
240	2347-R0130102	SCREW, BND T+ (3x10 mm)(x5)
241	2347-R0140064	SCREW, BND T+ (4x6 mm)(x6)
242	2347-R0130062	SCREW, BND T+ (3x6 mm)(x2)
243	2347-R0130062	SCREW, BND T+ (3x6 mm)(x2)
244	2347-R0130062	SCREW, BND T+ (3x6 mm)(x6)
245	2347-R0130102	SCREW, BND T+ (3x10 mm)(x4)
246	2343-300826	SCREW, CSK T+ (3x8 mm)
247	2557-300829	SCREW, B SPW+ (3x8 mm)(x2)
248	2557-300829	SCREW, B SPW+ (3x8 mm)(x3)
249	2557-300829	SCREW, B SPW+ (3x8 mm)(x6)
250	2557-301429	SCREW, B SPW+ (3x14 mm)(x8)
874	2440-62	NUT, SPE
898	4214-168	TERMINAL, PHONO GND
902	4442-14	PIN PLUG, PHONO MC SHORT PLUG (x2)

GENERAL UNIT

EXPLODED VIEW

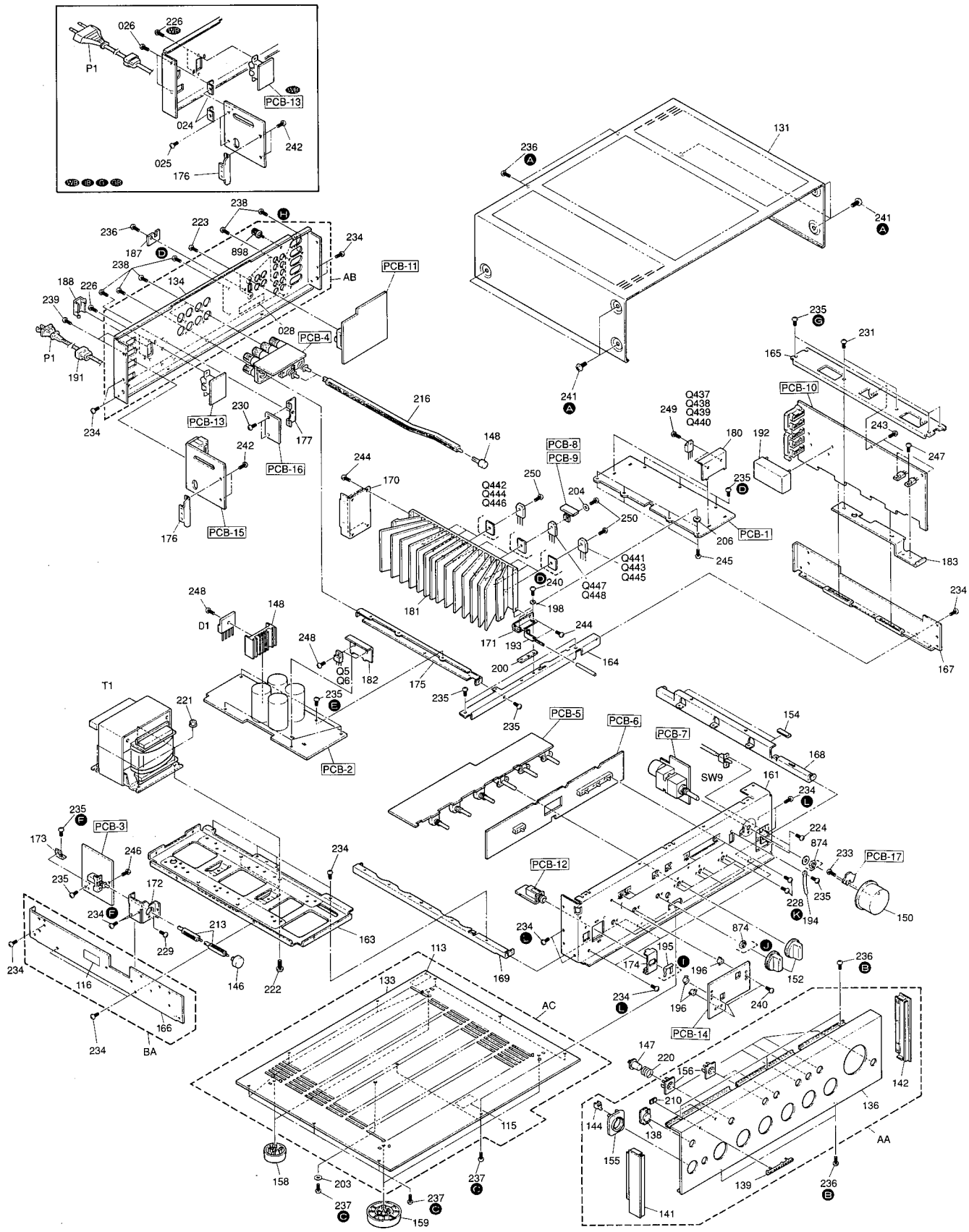

ALIGNMENT PROCEDURES (REFER TO PAGES 9, 10, 22 AND 23)

■ **Conditions :**
- Set the Source selector to the "CD" position.
- Set the Volume control to minimum.
- Set the Speaker selector to the "off" position.
- Make the adjustment at a room temperature of 77°F (25°C).

■ DC BALANCE ADJUSTMENT

Step	Connection Equipments	Adjustment	For
1	Connect the Digital Volt Meter to TP405 and TP407.	VR401	0 ±10 mV
2	Connect the Digital Volt Meter to TP406 and TP407.	VR402	0 ±10 mV

■ IDLING CURRENT ADJUSTMENT

Step	Connection Equipments	Adjustment	For
1	Connect the Digital Volt Meter to TP401 and TP403.	VR403	28 mV
2	Connect the Digital Volt Meter to TP402 and TP404.	VR404	28 mV

■ DC BALANCE CONFIRMATION

- Set the Speaker Operating Mode switch to the "4 Ω" position.

Step	Connection Equipments	For
1	Connect the Digital Volt Meter to TP405 and TP407.	0 ±60 mV
2	Connect the Digital Volt Meter to TP406 and TP407.	0 ±60 mV

■ After the above adjustment, leave the unit with its power on for longer than 15 minutes and then repeat the same adjustment.

BLOCK DIAGRAM

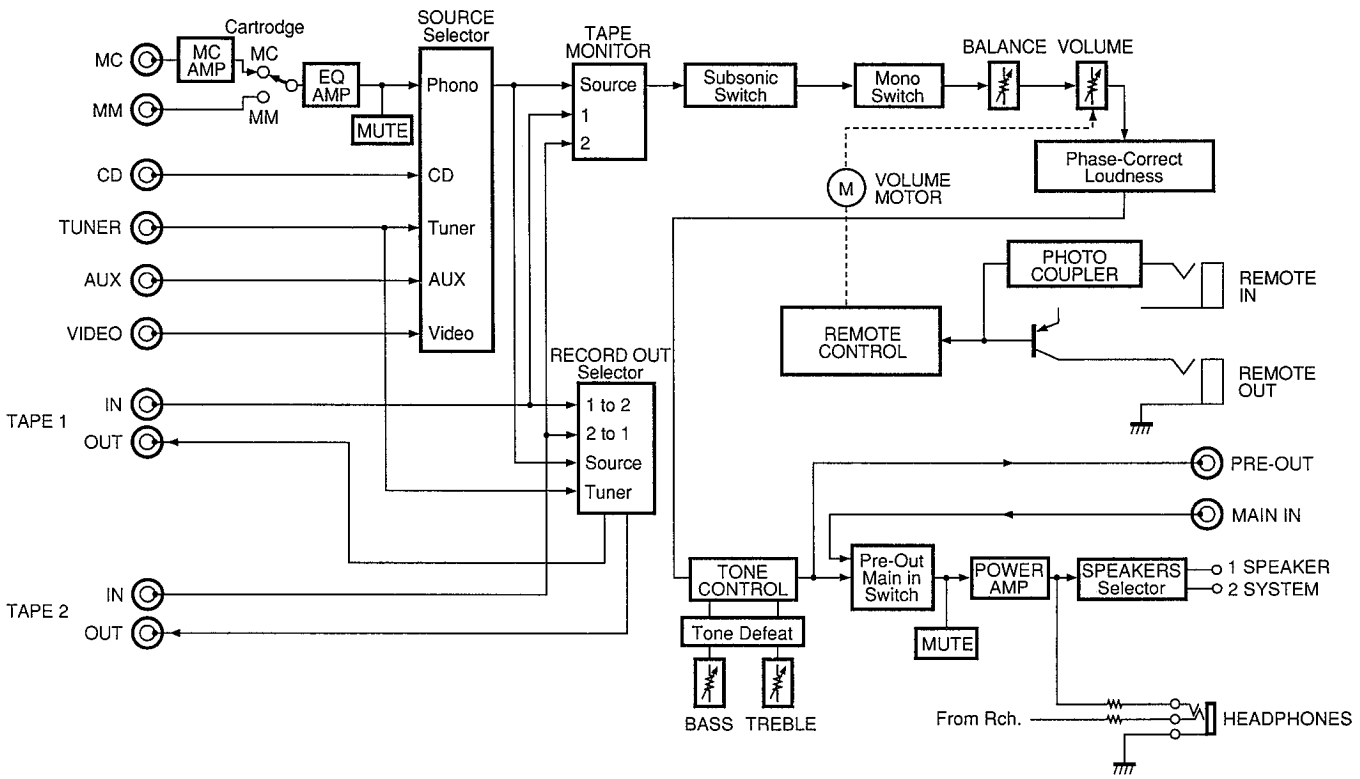

P. C. BOARDS (1)

PCB-2

Power Supply P. C. Board

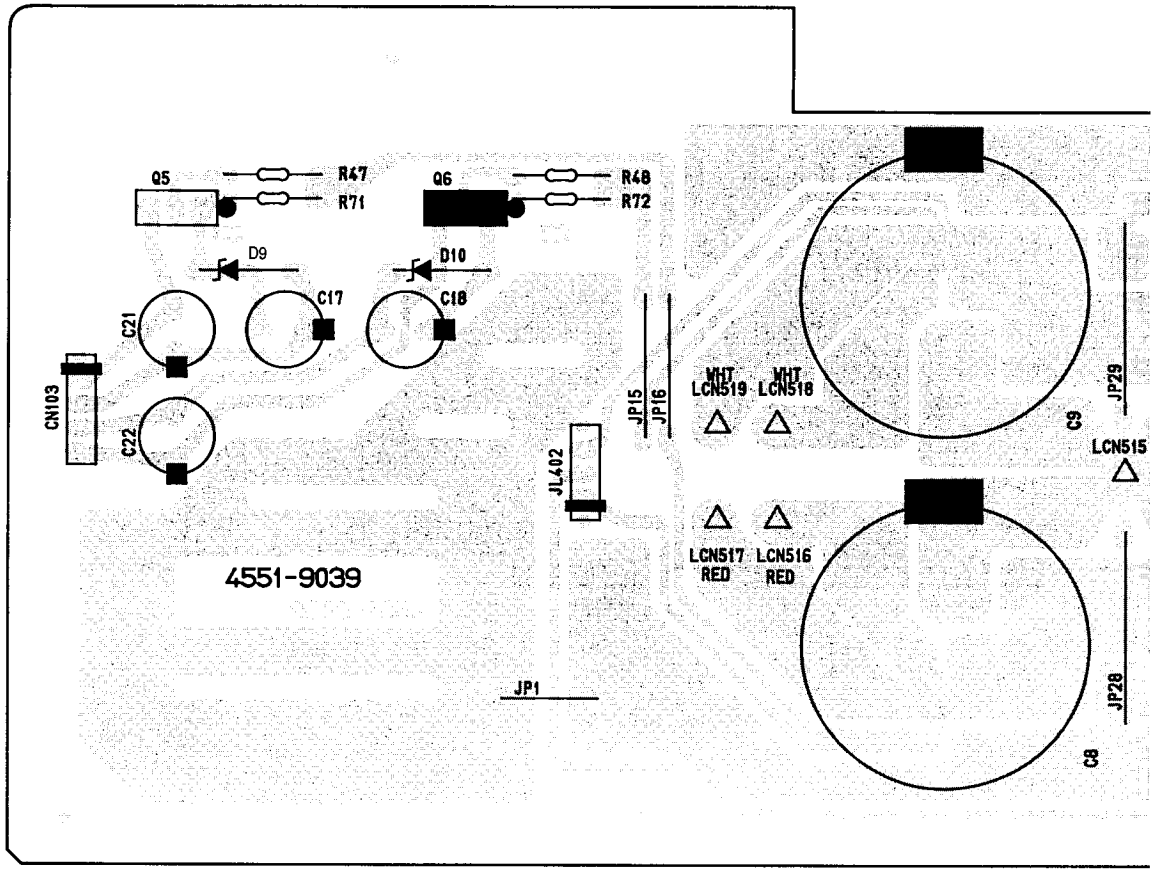

PCB-1

Main P. C. Board

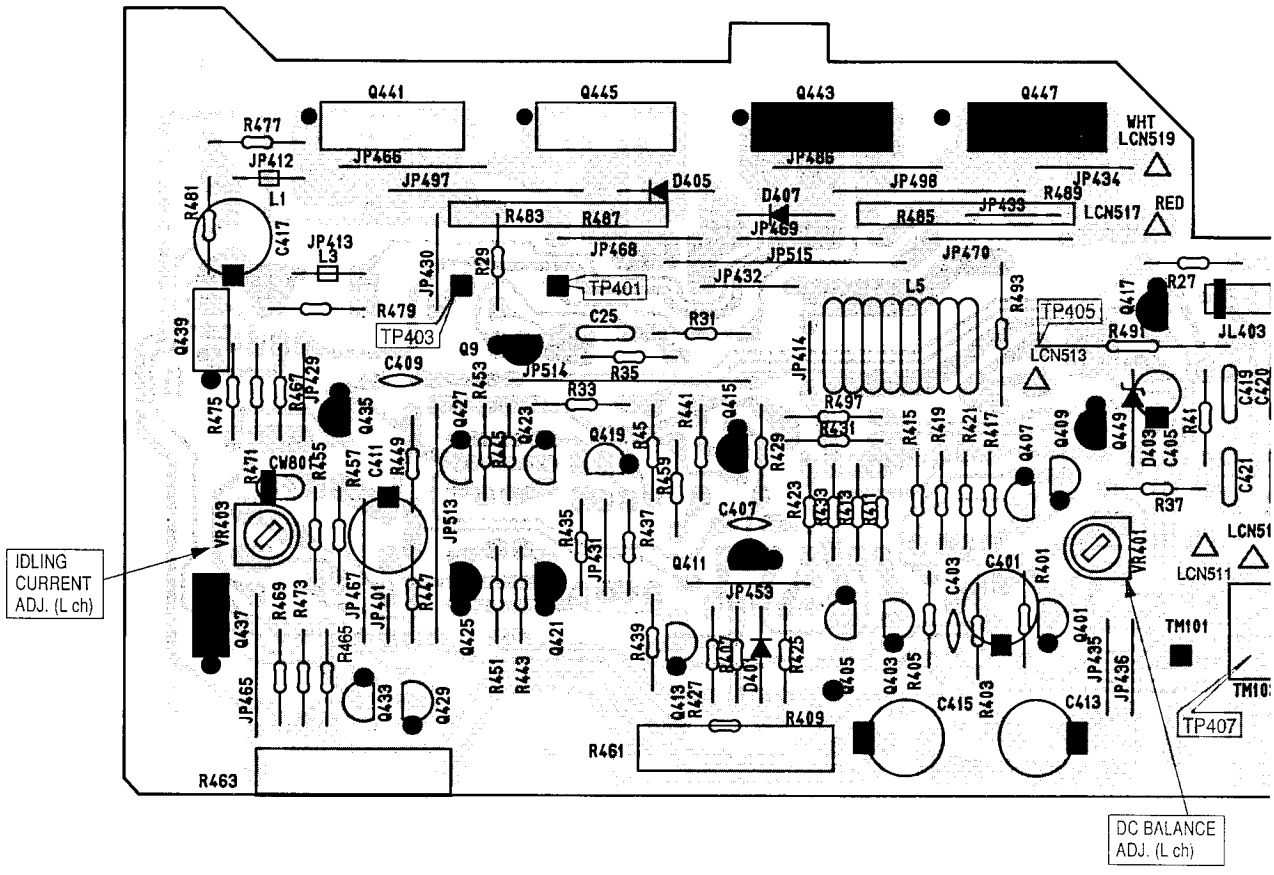

E | F | G | H | I | J

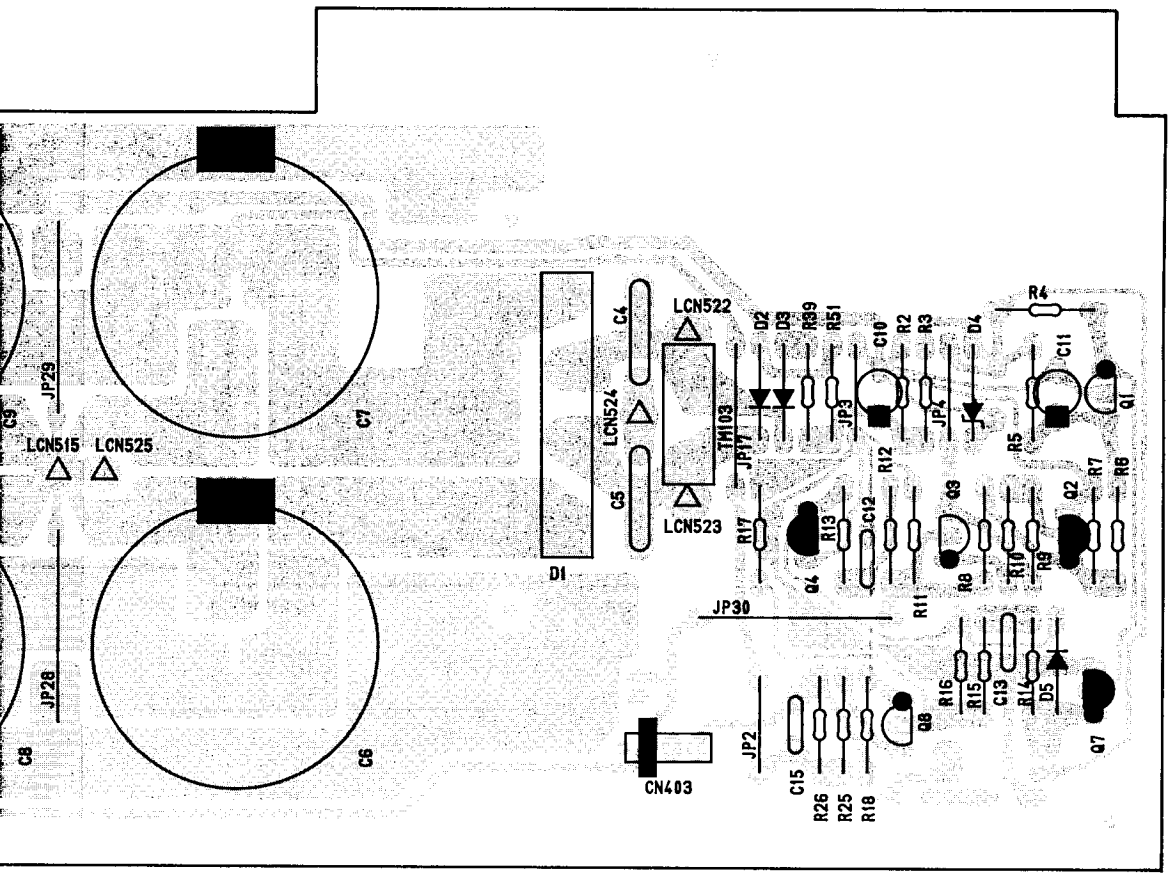

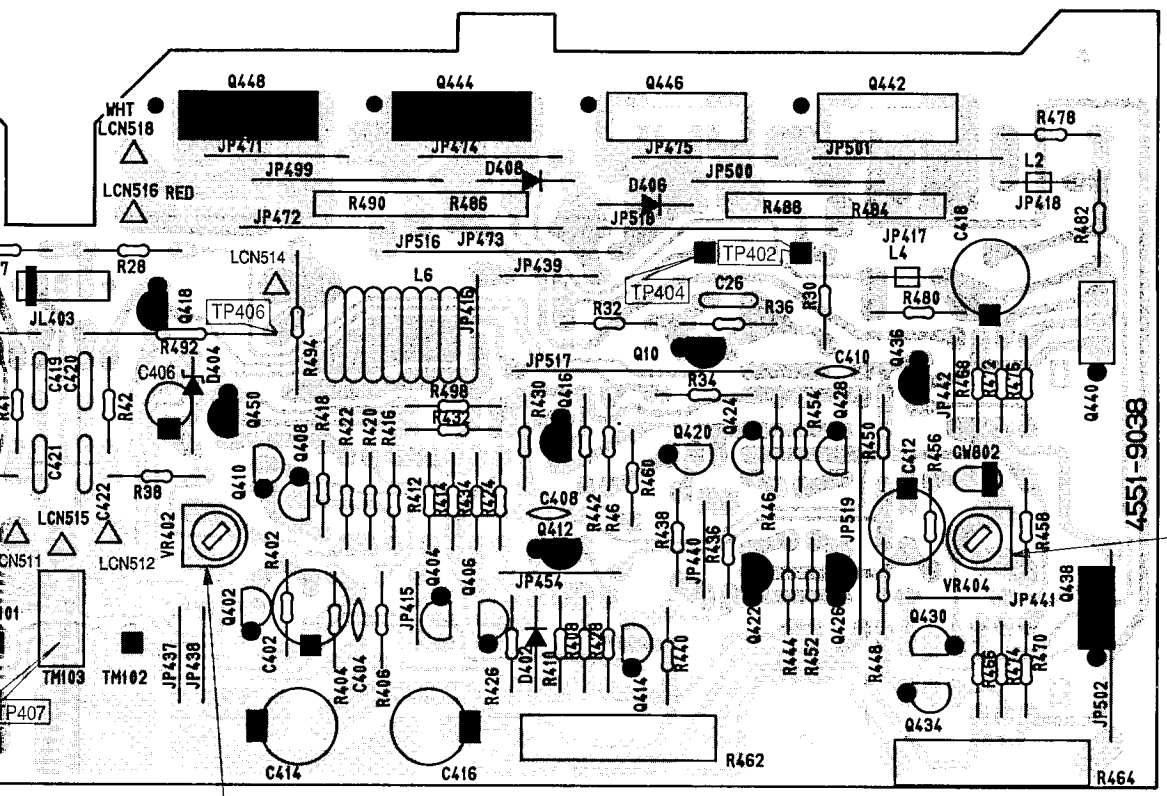

PCB-9
Bias (L ch)
P. C. Board

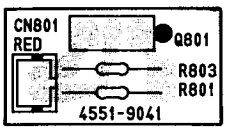

PCB-8
Bias (R ch)
P. C. Board

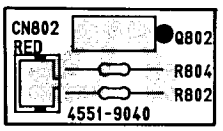

P. C. BOARDS (2)

PCB-5 Tone 1 P. C. Board

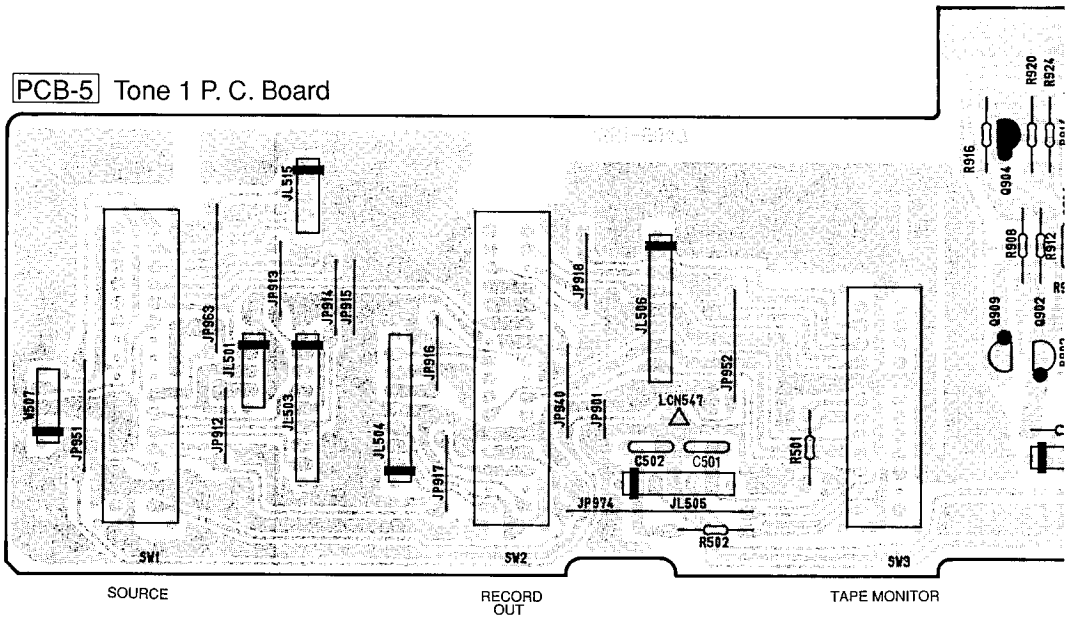

PCB-6 Tone 2 P. C. Board

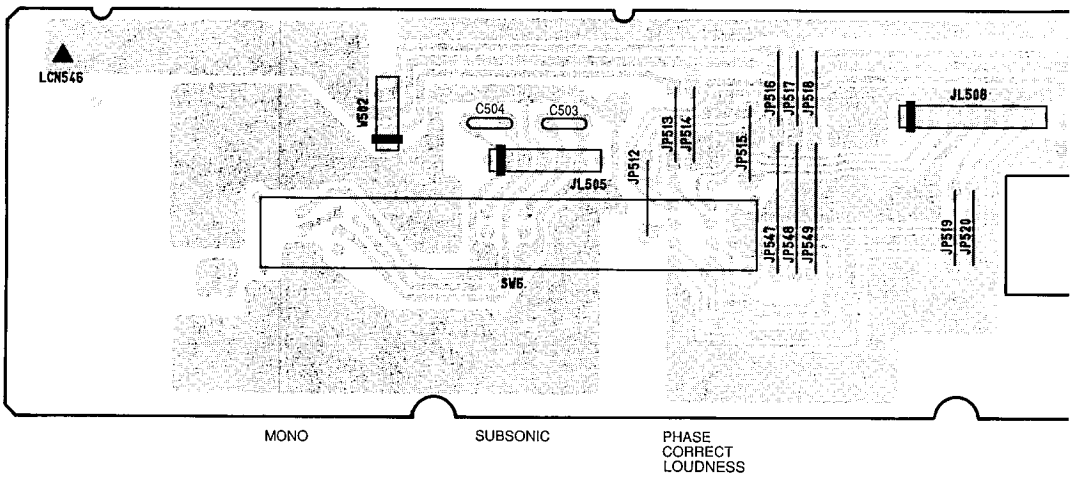

E	F	G	H	I	J

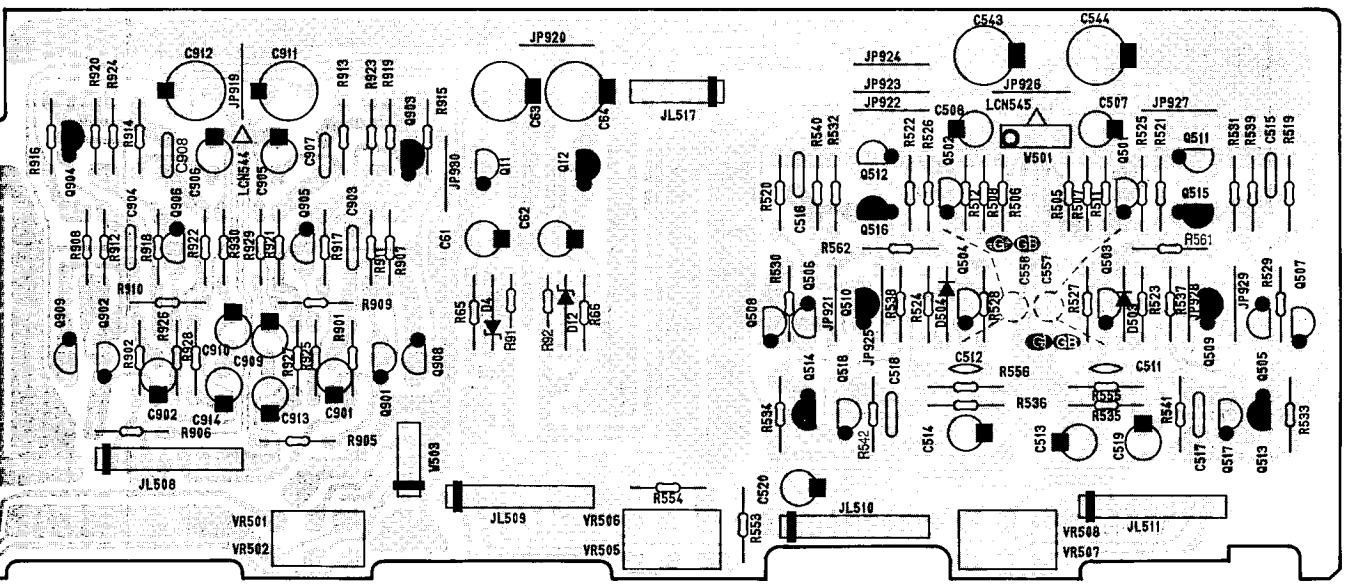

R BALANCE TREBLE BASS

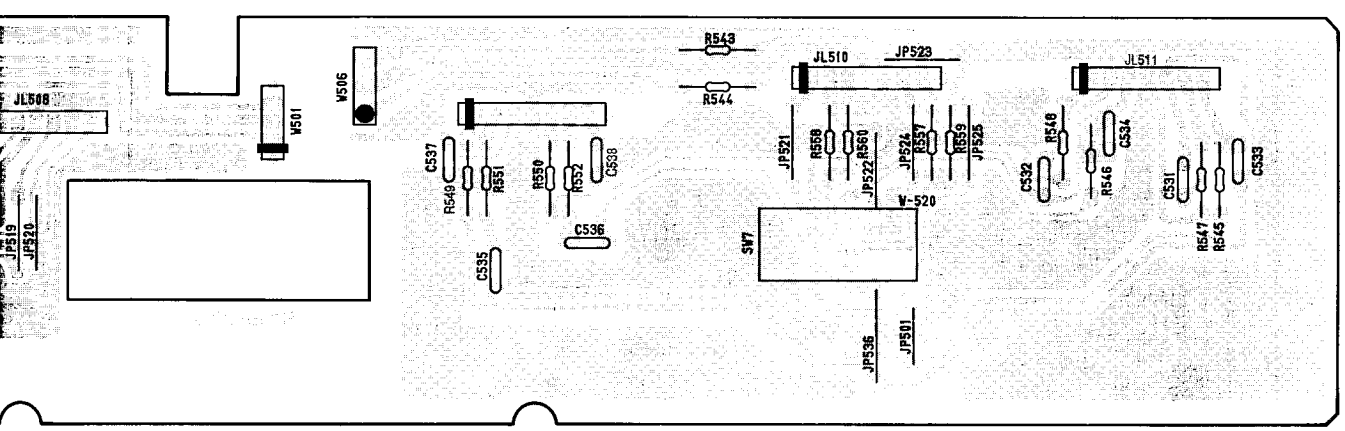

TONE DEFEAT

P. C. BOARDS (3)

PCB-10 EQ P.C.Board

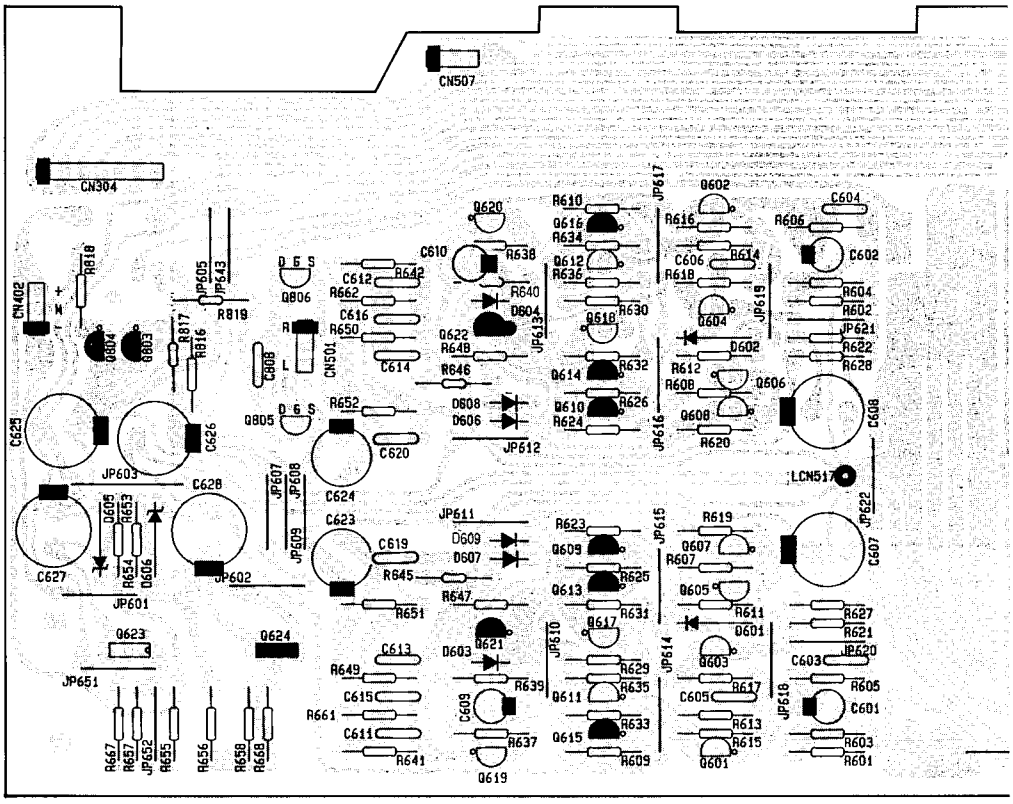

PCB-11
Tape In/Out P.C.Board

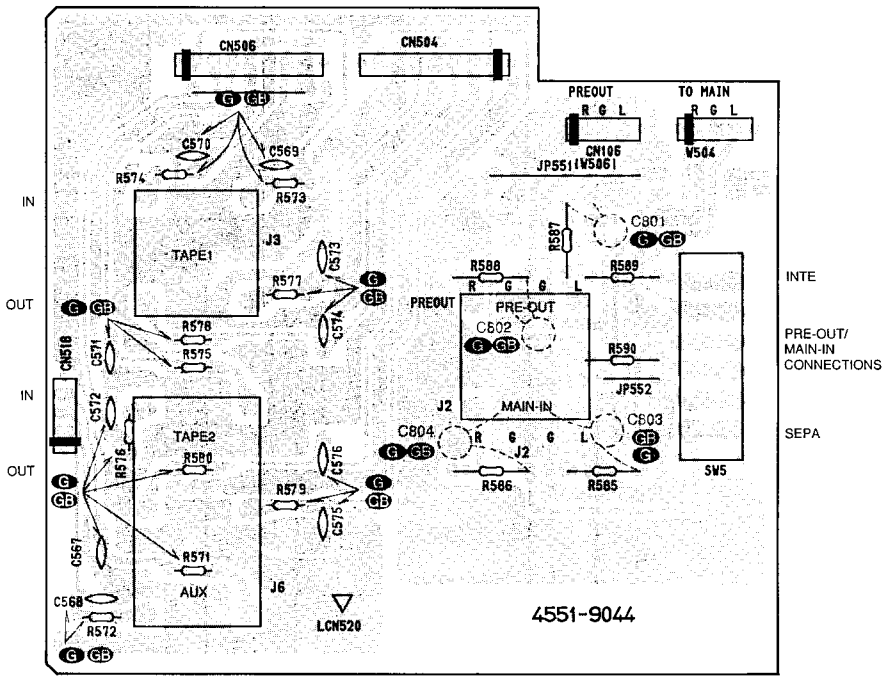

PCB-4
Speaker F

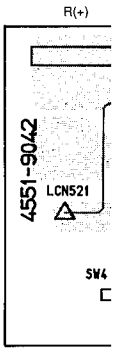

E	F	G	H	I	J

VIDEO

CD

TUNER

PHONO MC

PHONO MM

4551-8823

CARTRIDGE

PCB-4

Speaker P.C.Board

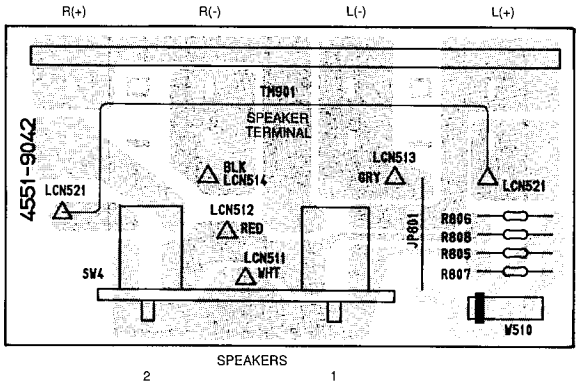

PCB-12

Headphones P.C.Board

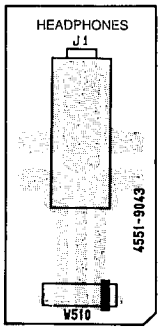

P. C. BOARDS (4)

PCB-16 Remote Jack P. C. Board

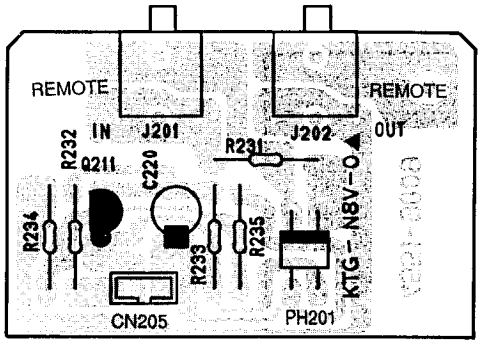

PCB-14 Remote P. C. Board

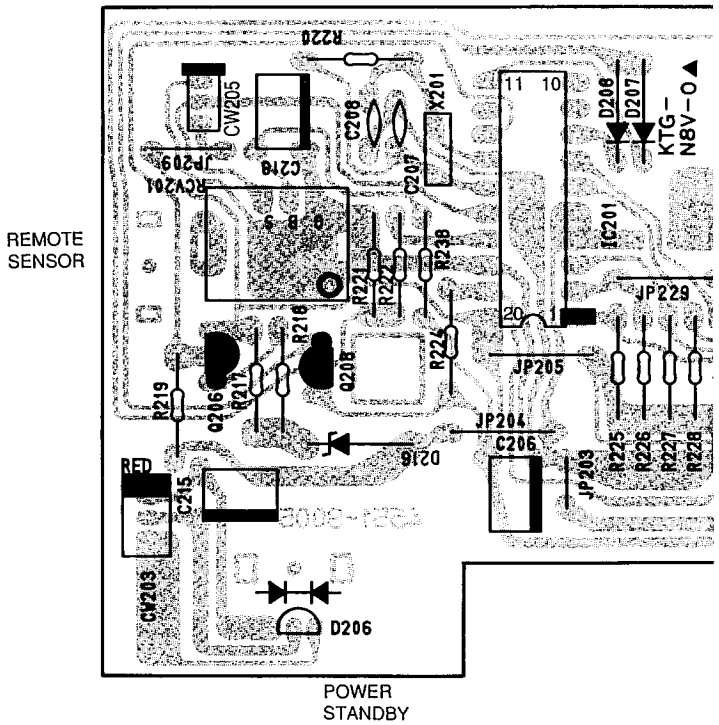

PCB-13
Speaker Operating Mode P. C. Board BK WB

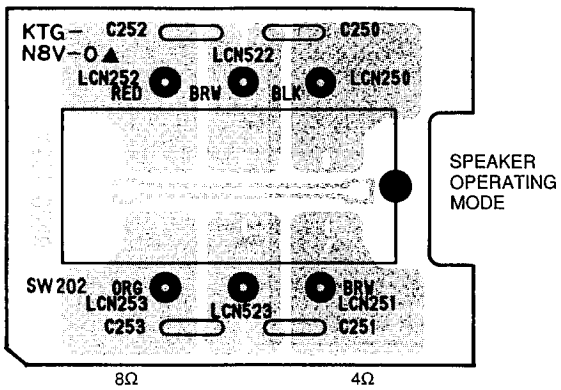

PCB-15 Back Up P. C. Board G GB

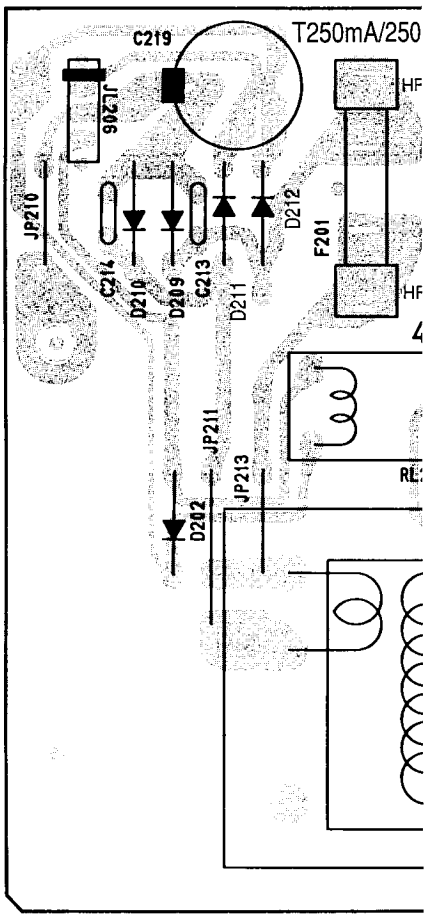

PCB-7 Volume P. C. Board

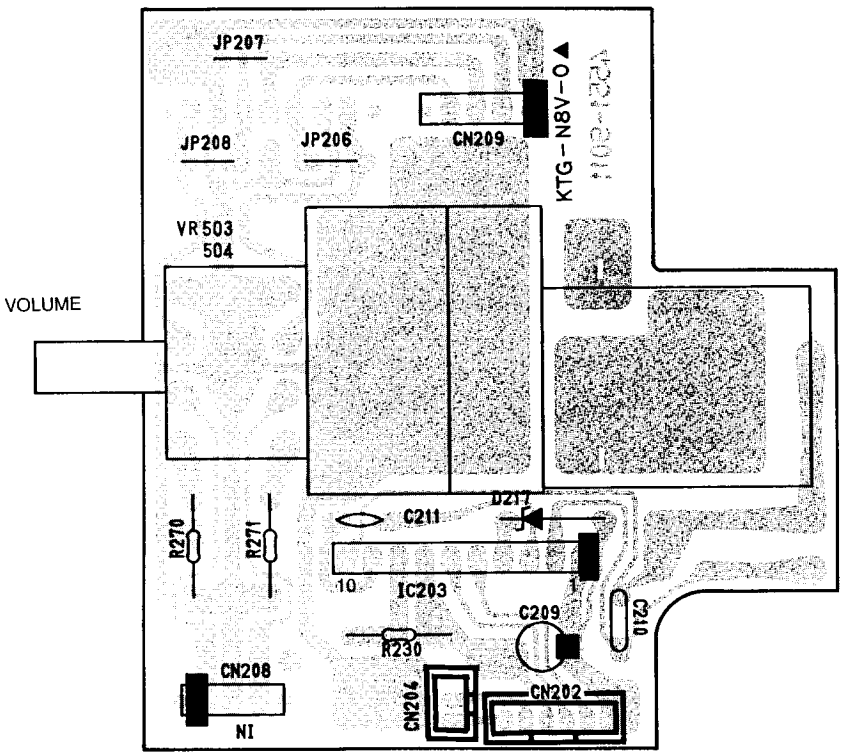

E	F	G	H	I	J

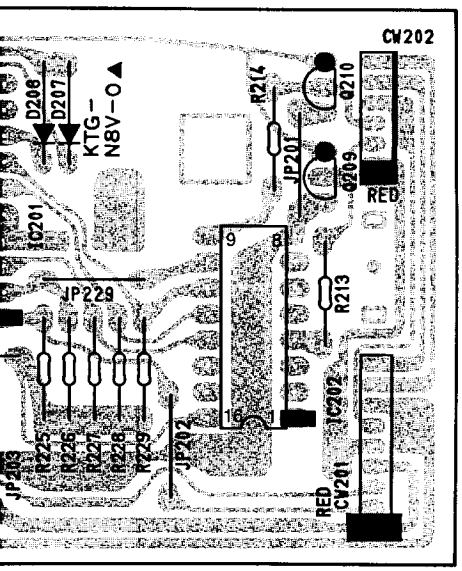

PCB-17
Volume LED P. C. Board

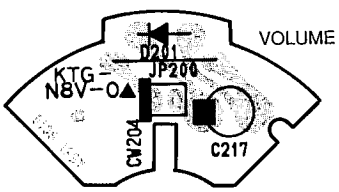

PCB-3 Power Switch P. C. Board

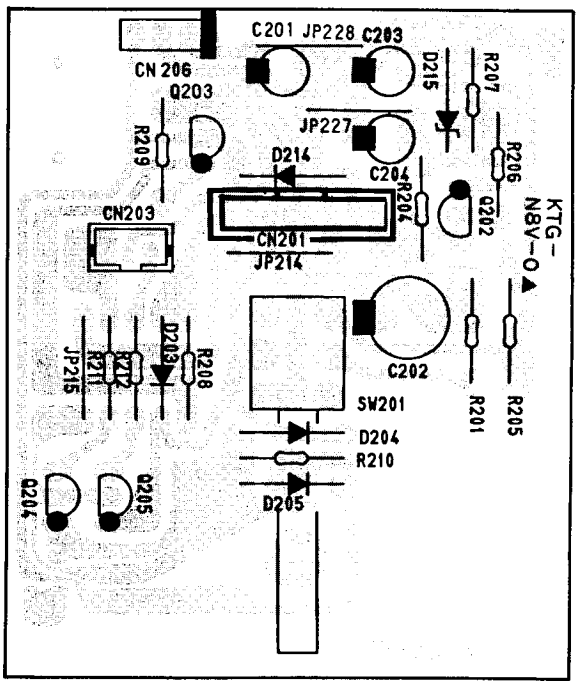

POWER

Board G GB IB WB

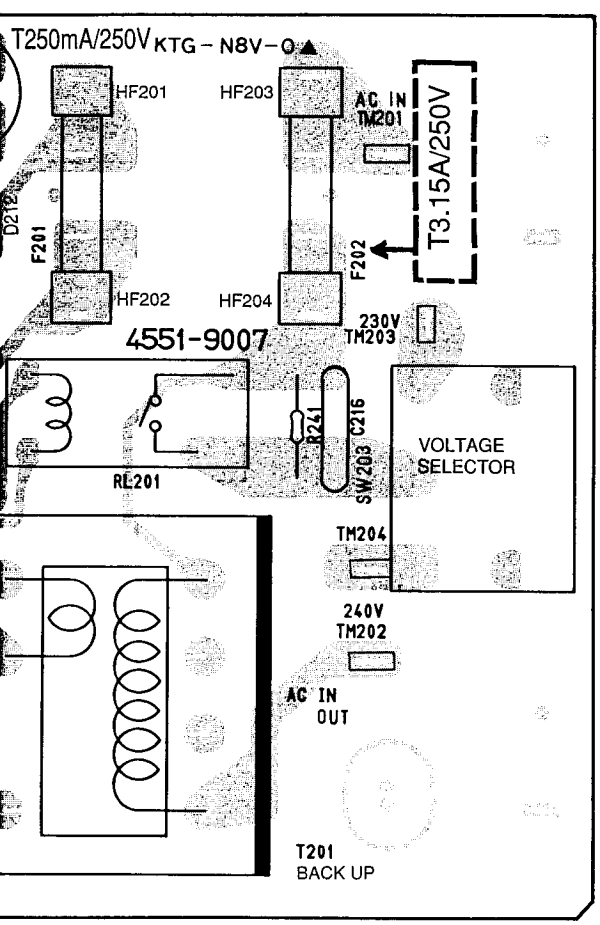

PCB-15 Back Up P. C. Board BK

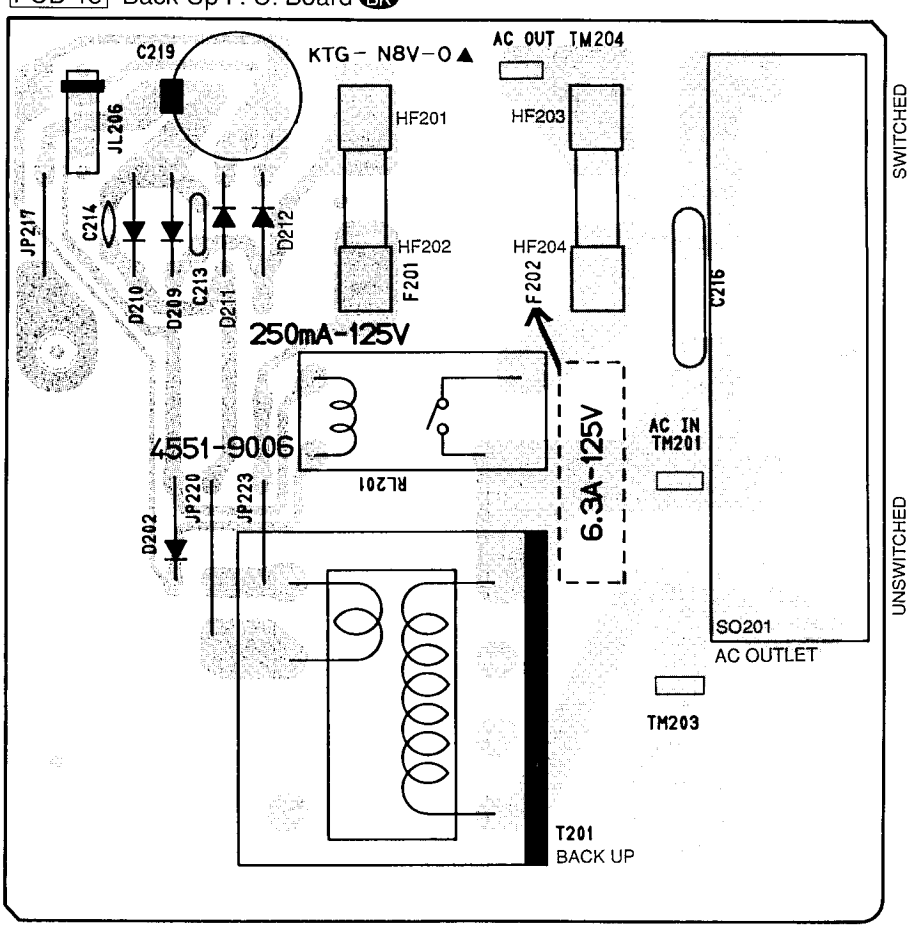

ELECTRICAL PARTS LIST

Ser. No.	Ref. No.	Part No.	Description
		PCB-1 MAIN P.C. BOARD	
		CAPACITORS	
815	C25	5354-683J1HM	CAP, MYL .068μ
815	C26	5354-683J1HM	CAP, MYL .068μ
741	C401	5345-S19BM107	CAP, MINI ELE 100μ/10V
741	C402	5345-S19BM107	CAP, MINI ELE 100μ/10V
750	C403	5353-680534	CAP, MCA 68P
750	C404	5353-680534	CAP, MCA 68P
743	C405	5345-476D041	CAP, MINI ELE 47μ/25V
743	C406	5345-476D041	CAP, MINI ELE 47μ/25V
749	C407	5353-070934	CAP, MCA 7P
749	C408	5353-070934	CAP, MCA 7P
748	C409	5353-101534	CAP, MCA 100P
748	C410	5353-101534	CAP, MCA 100P
742	C411	5345-S19FM106	CAP, MINI ELE 10μ/50V
742	C412	5345-S19FM106	CAP, MINI ELE 10μ/50V
744	C413	5345-337G0962	CAP, MINI ELE 330μ/63V
744	C414	5345-337G0962	CAP, MINI ELE 330μ/63V
744	C415	5345-337G0962	CAP, MINI ELE 330μ/63V
744	C416	5345-337G0962	CAP, MINI ELE 330μ/63V
742	C417	5345-S19FM106	CAP, MINI ELE 10μ/50V
742	C418	5345-S19FM106	CAP, MINI ELE 10μ/50V
747	C419	5354-104593	CAP, MYL .1μ
747	C420	5354-104593	CAP, MYL .1μ
747	C421	5354-104593	CAP, MYL .1μ
747	C422	5354-104593	CAP, MYL .1μ
		RESISTORS	
830	R27	5135-472522	RES, CBN 1/2P 4.7K
830	R28	5135-472522	RES, CBN 1/2P 4.7K
829	R29	5135-472522	RES, CBN 1/2P 4.7K
829	R30	5135-472522	RES, CBN 1/2P 4.7K
829	R31	5135-472522	RES, CBN 1/2P 4.7K
829	R32	5135-472522	RES, CBN 1/2P 4.7K
778	R33	5135-223522	RES, CBN 1/2P 22K
778	R34	5135-223522	RES, CBN 1/2P 22K
817	R35	5135-152522	RES, CBN 1/2P 1.5K
817	R36	5135-152522	RES, CBN 1/2P 1.5K
819	R37	5135-105522	RES, CBN 1/2P 1M
819	R38	5135-105522	RES, CBN 1/2P 1M
778	R41	5135-223522	RES, CBN 1/2P 22K
778	R42	5135-223522	RES, CBN 1/2P 22K
778	R45	5135-223522	RES, CBN 1/2P 22K
778	R46	5135-223522	RES, CBN 1/2P 22K
794	R401	5135-102522	RES, CBN 1/2P 1K
794	R402	5135-102522	RES, CBN 1/2P 1K
779	R403	5135-223522	RES, CBN 1/2P 22K
779	R404	5135-223522	RES, CBN 1/2P 22K
780	R405	5135-683522	RES, CBN 1/2P 68K
780	R406	5135-683522	RES, CBN 1/2P 68K
781	R407	5135-122522	RES, CBN 1/2P 1.2K
781	R408	5135-122522	RES, CBN 1/2P 1.2K
781	R409	5135-122522	RES, CBN 1/2P 1.2K
781	R410	5135-122522	RES, CBN 1/2P 1.2K
782	R411	5135-181522	RES, CBN 1/2P 180
782	R412	5135-181522	RES, CBN 1/2P 180
782	R413	5135-181522	RES, CBN 1/2P 180
782	R414	5135-181522	RES, CBN 1/2P 180
783	R415	5135-562522	RES, CBN 1/2P 5.6K
783	R416	5135-562522	RES, CBN 1/2P 5.6K
784	R417	5135-331522	RES, CBN 1/2P 330
784	R418	5135-331522	RES, CBN 1/2P 330
785	R419	5135-393522	RES, CBN 1/2P 39K
785	R420	5135-393522	RES, CBN 1/2P 39K
786	R421	5135-473522	RES, CBN 1/2P 47K
786	R422	5135-473522	RES, CBN 1/2P 47K
772	R423	5174-391381	RES, MTL 1/4P 390 BK WB
772B	R423	5174-471381	RES, MTL 1/4P 470 G GB IB
772	R424	5174-391381	RES, MTL 1/4P 390 BK WB
772B	R424	5174-471381	RES, MTL 1/4P 470 G GB IB
771	R425	5174-220381	RES, MTL 1/4P 22
771	R426	5174-220381	RES, MTL 1/4P 22
767 ⚠	R427	5102-5615116	RES, FUSE 560
767 ⚠	R428	5102-5615116	RES, FUSE 560
767 ⚠	R429	5102-5615116	RES, FUSE 560
767 ⚠	R430	5102-5615116	RES, FUSE 560
783	R431	5135-562522	RES, CBN 1/2P 5.6K
783	R432	5135-562522	RES, CBN 1/2P 5.6K
773	R433	5174-203381	RES, MTL 1/4P 20K
773	R434	5174-203381	RES, MTL 1/4P 20K
788	R435	5135-123522	RES, CBN 1/2P 12K
788	R436	5135-123522	RES, CBN 1/2P 12K
788	R437	5135-123522	RES, CBN 1/2P 12K
788	R438	5135-123522	RES, CBN 1/2P 12K
787	R439	5135-222522	RES, CBN 1/2P 2.2K
787	R440	5135-222522	RES, CBN 1/2P 2.2K
787	R441	5135-222522	RES, CBN 1/2P 2.2K
787	R442	5135-222522	RES, CBN 1/2P 2.2K
765 ⚠	R443	5102-1815116	RES, FUSE 180
765 ⚠	R444	5102-1815116	RES, FUSE 180
765 ⚠	R445	5102-1815116	RES, FUSE 180
765 ⚠	R446	5102-1815116	RES, FUSE 180
774	R447	5174-123381	RES, MTL 1/4P 12K
774	R448	5174-123381	RES, MTL 1/4P 12K
774	R449	5174-123381	RES, MTL 1/4P 12K
774	R450	5174-123381	RES, MTL 1/4P 12K
765 ⚠	R451	5102-1815116	RES, FUSE 180
765 ⚠	R452	5102-1815116	RES, FUSE 180
765 ⚠	R453	5102-1815116	RES, FUSE 180
765 ⚠	R454	5102-1815116	RES, FUSE 180
789	R455	5135-151522	RES, CBN 1/2P 150
789	R456	5135-151522	RES, CBN 1/2P 150
790	R457	5135-391522	RES, CBN 1/2P 390
790	R458	5135-391522	RES, CBN 1/2P 390
777	R459	5135-131522	RES, CBN 1/2P 130
777	R460	5135-131522	RES, CBN 1/2P 130
764 ⚠	R461	5102-2205711	RES, FUSE 22
764 ⚠	R462	5102-2205711	RES, FUSE 22
764 ⚠	R463	5102-2205711	RES, FUSE 22
764 ⚠	R464	5102-2205711	RES, FUSE 22
766 ⚠	R465	5102-1015116	RES, FUSE 100
766 ⚠	R466	5102-1015116	RES, FUSE 100
766 ⚠	R467	5102-1015116	RES, FUSE 100
766 ⚠	R468	5102-1015116	RES, FUSE 100
768 ⚠	R469	5102-2R25116	RES, FUSE 2.2
768 ⚠	R470	5102-2R25116	RES, FUSE 2.2
768 ⚠	R471	5102-2R25116	RES, FUSE 2.2
768 ⚠	R472	5102-2R25116	RES, FUSE 2.2
791 ⚠	R473	5102-1505116	RES, FUSE 15
791 ⚠	R474	5102-1505116	RES, FUSE 15
791 ⚠	R475	5102-1505116	RES, FUSE 15
791 ⚠	R476	5102-1505116	RES, FUSE 15
792	R477	5135-100522	RES, CBN 1/2P 10
792	R478	5135-100522	RES, CBN 1/2P 10
792	R479	5135-100522	RES, CBN 1/2P 10
792	R480	5135-100522	RES, CBN 1/2P 10
793 ⚠	R481	5102-6805116	RES, FUSE 68
793 ⚠	R482	5102-6805116	RES, FUSE 68
757	R483/487	5275-S040JR27	RES, CEM 5P .27
757	R484/488	5275-S040JR27	RES, CEM 5P .27
757	R485/489	5275-S040JR27	RES, CEM 5P .27
757	R486/490	5275-S040JR27	RES, CEM 5P .27
758	R491	5173-150571	RES, MTL 2P 15
758	R492	5173-150571	RES, MTL 2P 15
759	R493	5171-1R1572	RES, MTL 1P 1.1
759	R494	5171-1R1572	RES, MTL 1P 1.1
776	R497	5135-223522	RES, CBN 1/2P 22K
776	R498	5135-223522	RES, CBN 1/2P 22K
		TRANSISTORS	
804	Q9	5611-970 (BL)	XISTOR, PNP R
804	Q10	5611-970 (BL)	XISTOR, PNP R
805	Q401	5616-2SK364 (V)	FET, N-CH
805	Q402	5616-2SK364 (V)	FET, N-CH
711	Q403	5613-2240 (BL)	XISTOR, NPN R

Ser. No.	Ref. No.	Part No.	Description
711	Q404	5613-2240 (BL)	XISTOR, NPN R
711	Q405	5613-2240 (BL)	XISTOR, NPN R
711	Q406	5613-2240 (BL)	XISTOR, NPN R
715	Q407	5613-2320L (F)	XISTOR, NPN R
715	Q408	5613-2320L (F)	XISTOR, NPN R
715	Q409	5613-2320L (F)	XISTOR, NPN R
715	Q410	5613-2320L (F)	XISTOR, NPN R
717	Q411	5611-1145 (Y)	XISTOR, PNP R
717	Q412	5611-1145 (Y)	XISTOR, PNP R
714	Q413	5613-2240 (BL)	XISTOR, NPN R
714	Q414	5613-2240 (BL)	XISTOR, NPN R
712	Q415	5611-970 (BL)	XISTOR, PNP R
712	Q416	5611-970 (BL)	XISTOR, PNP R
713	Q417	5611-992 (E)	XISTOR, PNP R
713	Q418	5611-992 (E)	XISTOR, PNP R
714	Q419	5613-2240 (BL)	XISTOR, NPN R
714	Q420	5613-2240 (BL)	XISTOR, NPN R
735	Q421	5611-1285 (F)	XISTOR, PNP R
735	Q422	5611-1285 (F)	XISTOR, PNP R
716	Q423	5613-3245 (F)	XISTOR, NPN R
716	Q424	5613-3245 (F)	XISTOR, NPN R
735	Q425	5611-1285 (F)	XISTOR, PNP R
735	Q426	5611-1285 (F)	XISTOR, PNP R
716	Q427	5613-3245 (F)	XISTOR, NPN R
716	Q428	5613-3245 (F)	XISTOR, NPN R
720	Q429	5613-945 (P)	XISTOR, NPN R
720	Q430	5613-945 (P)	XISTOR, NPN R
718	Q433	5613-2235 (Y)	XISTOR, NPN R
718	Q434	5613-2235 (Y)	XISTOR, NPN R
719	Q435	5611-965 (Y)	XISTOR, PNP R
719	Q436	5611-965 (Y)	XISTOR, PNP R
724	Q437	5611-1306 (Y)	XISTOR, PNP R
724	Q438	5611-1306 (Y)	XISTOR, PNP R
721	Q439	5613-3298 (Y)	XISTOR, NPN R
721	Q440	5613-3298 (Y)	XISTOR, NPN R
727	Q441	5613-3907 (O)	XISTOR, NPN R
727	Q442	5613-3907 (O)	XISTOR, NPN R
729	Q443	5611-1516 (O)	XISTOR, PNP R
729	Q444	5611-1516 (O)	XISTOR, PNP R
727	Q445	5613-3907 (O)	XISTOR, NPN R
727	Q446	5613-3907 (O)	XISTOR, NPN R
729	Q447	5611-1516 (O)	XISTOR, PNP R
729	Q448	5611-1516 (O)	XISTOR, PNP R
712	Q449	5611-970 (BL)	XISTOR, PNP R
712	Q450	5611-970 (BL)	XISTOR, PNP R
		DIODES	
732	D401	5631-1S2473	DIODE, DET
732	D402	5631-1S2473	DIODE, DET
733	D403	5635-HZ15-1L	DIODE, ZENER
733	D404	5635-HZ15-1L	DIODE, ZENER
734	D405	5632-10DF2	DIODE, RECT
734	D406	5632-10DF2	DIODE, RECT
734	D407	5632-10DF2	DIODE, RECT
734	D408	5632-10DF2	DIODE, RECT
		COILS	
737	L5	5991-7125	SPRING COIL
737	L6	5991-7125	SPRING COIL
		CONTROLS	
761	VR401	5101-S0801104	RES, SEMI FIX 100K, DC BALANCE
761	VR402	5101-S0801104	RES, SEMI FIX 100K, DC BALANCE
762	VR403	5101-S0801102	RES, SEMI FIX 1K, IDLING CURRENT
762	VR404	5101-S0801102	RES, SEMI FIX 1K, IDLING CURRENT
		MISCELLANEOUS	
745	CW801	4163-S0202151	CONNECTOR W/W
745	CW802	4163-S0202151	CONNECTOR W/W
738	L1	5597-35502	CORE, BEADS
738	L2	5597-35502	CORE, BEADS
738	L3	5597-35502	CORE, BEADS

Ser. No.	Ref. No.	Part No.	Description
738	L4	5597-35502	CORE, BEADS
798	LCN511	4163-0135026	CONNECTOR W/W
796	LCN512	4163-0135024	CONNECTOR W/W
799	LCN513	4163-0135027	CONNECTOR W/W
797	LCN514	4163-0135025	CONNECTOR W/W
909	LCN515	4163-0120024	CONNECTOR W/W
907	LCN516	4163-0120025	CONNECTOR W/W
907	LCN517	4163-0120025	CONNECTOR W/W
908	LCN518	4163-0120027	CONNECTOR W/W
908	LCN519	4163-0120027	CONNECTOR W/W
810	TP401	4214-132	TERMINAL
810	TP402	4214-132	TERMINAL
810	TP403	4214-132	TERMINAL
810	TP404	4214-132	TERMINAL
919	TM101	4214-11013	TERMINAL
919	TM102	4214-11013	TERMINAL
910	TM103	4214-11021	TERMINAL
931		2240-Z032	HOLDER, JL403

PCB-2 POWER SUPPLY P.C. BOARD

Ser. No.	Ref. No.	Part No.	Description
		CAPACITORS	
834	C4	5352-1041957	CAP, MTL .1μ
834	C5	5352-1041957	CAP, MTL .1μ
840 ⚠	C6	5341-002GM828	CAP, ELE 8200μ/63V
840 ⚠	C7	5341-002GM828	CAP, ELE 8200μ/63V
840 ⚠	C8	5341-002GM828	CAP, ELE 8200μ/63V
840 ⚠	C9	5341-002GM828	CAP, ELE 8200μ/63V
811	C10	5345-S19FM475	CAP, MINI ELE 4.7μ/50V
812	C11	5345-S19CM336	CAP, MINI ELE 33μ/16V
813	C12	5354-334593	CAP, MYL .33μ
813	C13	5354-334593	CAP, MYL .33μ
816	C15	5359-3325851	CAP, PPP 3300P
699	C17	5345-337D041	CAP, MINI ELE 330μ/25V
699	C18	5345-337D041	CAP, MINI ELE 330μ/25V
700 ⚠	C21	5345-227D041	CAP, MINI ELE 220μ/25V
700 ⚠	C22	5345-227D041	CAP, MINI ELE 220μ/25V
		RESISTORS	
821	R2	5135-103522	RES, CBN 1/2P 10K
828	R3	5135-472522	RES, CBN 1/2P 4.7K
825	R4	5135-473522	RES, CBN 1/2P 47K
824	R5	5135-334522	RES, CBN 1/2P 330K
822	R6	5135-684522	RES, CBN 1/2P 680K
827	R7	5135-184522	RES, CBN 1/2P 180K
823	R8	5135-225522	RES, CBN 1/2P 2.2M
820	R9	5135-104522	RES, CBN 1/2P 100K
820	R10	5135-104522	RES, CBN 1/2P 100K
821	R11	5135-103522	RES, CBN 1/2P 10K
820	R12	5135-104522	RES, CBN 1/2P 100K
825	R13	5135-473522	RES, CBN 1/2P 47K
826	R14	5135-223522	RES, CBN 1/2P 22K
826	R15	5135-223522	RES, CBN 1/2P 22K
825	R16	5135-473522	RES, CBN 1/2P 47K
821	R17	5135-103522	RES, CBN 1/2P 10K
814	R18	5135-223522	RES, CBN 1/2P 22K
814	R25	5135-152522	RES, CBN 1/2P 1.5K
825	R26	5135-473522	RES, CBN 1/2P 47K
818	R39	5135-332522	RES, CBN 1/2P 3.3K
702 ⚠	R47	5102-4705116	RES, FUSE 47
702 ⚠	R48	5102-4705116	RES, FUSE 47
818	R51	5135-332522	RES, CBN 1/2P 3.3K
706	R71	5135-822522	RES, CBN 1/2P 8.2K
706	R72	5135-822522	RES, CBN 1/2P 8.2K
		TRANSISTORS	
801	Q1	5613-1740S (S)	XISTOR, NPN R
802	Q2	5611-933S (S)	XISTOR, PNP R
801	Q3	5613-1740S (S)	XISTOR, NPN R
802	Q4	5611-933S (S)	XISTOR, PNP R
691	Q5	5614-1266 (P)	XISTOR, NPN A
692	Q6	5612-941 (P)	XISTOR, PNP A
802	Q7	5611-933S (S)	XISTOR, PNP R
803	Q8	5613-1845 (E)	XISTOR, NPN R

Ser. No.	Ref. No.	Part No.	Description
		DIODES	
839 ⚠	D1	5685-D5SB40	SILICON, BRIG
808 ⚠	D2	5636-1S2471	DIODE, SWITCH
808 ⚠	D3	5636-1S2471	DIODE, SWITCH
807	D4	5635-HZ6A2L	DIODE, ZENER
809	D5	5631-1S2473	DIODE, DET
696	D9	5635-HZ24-2L	DIODE, ZENER
696	D10	5635-HZ24-2L	DIODE, ZENER
		MISCELLANEOUS	
913	CN103	4443-040185	CONNECTOR
917	CN403	4443-030185	CONNECTOR
952	JL402	4242-R0503401	JUMPER LEAD
935	JL403	4242-R0503201	JUMPER LEAD
068B	LCN522	4163-0117021	CONNECTOR W/W G GB IB
069B	LCN523	4163-0117023	CONNECTOR W/W G GB IB
947	LCN524	4163-0117020	CONNECTOR W/W
948	LCN525	4163-0125020	CONNECTOR W/W
901	TM104	4214-11023	TERMINAL BK
924		2240-Z032	HOLDER, JL402
932		2240-Z072	HOLDER, JL504
932		2240-Z072	HOLDER, JL506

PCB-3 POWER SWITCH P. C. BOARD

Ser. No.	Ref. No.	Part No.	Description
		CAPACITORS	
407	C201	5345-226D041	CAP, MINI ELE 22μ/25V
408	C202	5345-337C041	CAP, MINI ELE 330μ/16V
405	C203	5345-476B041	CAP, MINI ELE 47μ/10V
406	C204	5345-107A041	CAP, MINI ELE 100μ/6.3V
		RESISTORS	
409 ⚠	R201	5102-2205116	RES, FUSE 22
402	R204	5135-151522	RES, CBN 1/2P 150
480 ⚠	R205	5102-3304715	RES, FUSE 33
414	R206	5135-102522	RES, CBN 1/2P 1K
411	R207	5135-271522	RES, CBN 1/2P 270
413	R208	5135-822522	RES, CBN 1/2P 8.2K
415	R209	5135-472522	RES, CBN 1/2P 4.7K
415	R210	5135-472522	RES, CBN 1/2P 4.7K
411	R211	5135-271522	RES, CBN 1/2P 270
411	R212	5135-271522	RES, CBN 1/2P 270
		TRANSISTORS	
404	Q202	5614-667(C)	XISTOR, NPN A
403	Q203	5613-3246(H)	XISTOR, NPN R
474	Q204	5613-1740S(S)	XISTOR, NPN R
474	Q205	5613-1740S(S)	XISTOR, NPN R
		DIODES	
401	D203	5636-1S2473	DIODE, SWITCH
401	D204	5636-1S2473	DIODE, SWITCH
401	D205	5636-1S2473	DIODE, SWITCH
401	D214	5636-1S2473	DIODE, SWITCH
475	D215	5635-HZ6B2L	DIODE, ZENER
		MISCELLANEOUS	
462	CN201	4443-0801140	CONNECTOR
464	CN203	4443-0301140	CONNECTOR
481	CN206	4443-030185	CONNECTOR
861	SW201	4431-A020170	SWITCH, PUSH, POWER

PCB-4 SPEAKER P. C. BOARD

Ser. No.	Ref. No.	Part No.	Description
		RESISTORS	
760	R805	5135-102522	RES, CBN 1/2P 1K
760	R806	5135-102522	RES, CBN 1/2P 1K
760	R807	5135-102522	RES, CBN 1/2P 1K
760	R808	5135-102522	RES, CBN 1/2P 1K
		MISCELLANEOUS	
800	LCN521	4163-0110027	CONNECTOR W/W
873	SW4	4431-S0314204	SWITCH, PUSH, SPEAKERS 1/2
897 ⚠	TM901	4214-239	TERMINAL, SPEAKER BK
897B ⚠	TM901	4214-240	TERMINAL, SPEAKER G GB IB WB
904		2224-Z031	HOLDER, W510

PCB-5 TONE 1 P.C. BOARD

Ser. No.	Ref. No.	Part No.	Description
		CAPACITORS	
701	C61	5345-107D041	CAP, MINI ELE 100μ/25V
701	C62	5345-107D041	CAP, MINI ELE 100μ/25V
698	C63	5345-227D041	CAP, MINI ELE 220μ/25V
698	C64	5345-227D041	CAP, MINI ELE 220μ/25V
634	C501	5359-1015851	CAP, PPP 100P
634	C502	5359-1015851	CAP, PPP 100P
630	C507	5345-S19CM106	CAP, MINI ELE 10μ/16V
630	C508	5345-S19CM106	CAP, MINI ELE 10μ/16V
637	C511	5353-010934	CAP, MCA 1P
637	C512	5353-010934	CAP, MCA 1P
631	C513	5345-S19DM226	CAP, MINI ELE 22μ/25V
631	C514	5345-S19DM226	CAP, MINI ELE 22μ/25V
638	C515	5353-680534	CAP, MCA 68P
638	C516	5353-680534	CAP, MCA 68P
638	C517	5353-680534	CAP, MCA 68P
638	C518	5353-680534	CAP, MCA 68P
632	C519	5345-S19CM476	CAP, MINI ELE 47μ/16V
632	C520	5345-S19CM476	CAP, MINI ELE 47μ/16V
629	C543	5345-227D041	CAP, MINI ELE 220μ/25V
629	C544	5345-227D041	CAP, MINI ELE 220μ/25V
066B	C557	5359-1015851	CAP, PPP 100P G GB
066B	C558	5359-1015851	CAP, PPP 100P G GB
595	C901	5345-S19FM104	CAP, MINI ELE .1μ/50V
595	C902	5345-S19FM104	CAP, MINI ELE .1μ/50V
599	C903	5354-154593	CAP, MYL .15μ
599	C904	5354-154593	CAP, MYL .15μ
597	C905	5345-107D045	CAP, MINI ELE 100μ/25V
597	C906	5345-107D045	CAP, MINI ELE 100μ/25V
600	C907	5354-334593	CAP, MYL .33μ
600	C908	5354-334593	CAP, MYL .33μ
596	C909	5345-S19FM474	CAP, MINI ELE .47μ/50V
596	C910	5345-S19FM474	CAP, MINI ELE .47μ/50V
594	C911	5345-227D041	CAP, MINI ELE 220μ/25V
594	C912	5345-227D041	CAP, MINI ELE 220μ/25V
596	C913	5345-S19FM474	CAP, MINI ELE .47μ/50V
596	C914	5345-S19FM474	CAP, MINI ELE .47μ/50V
		RESISTORS	
703 ⚠	R65	5102-2215116	RES, FUSE 220
703 ⚠	R66	5102-2215116	RES, FUSE 220
514	R91	5232-562J16P	RES, CBN 1/6P 5.6K
514	R92	5232-562J16P	RES, CBN 1/6P 5.6K
651	R501	5135-331522	RES, CBN 1/2P 330
651	R502	5135-331522	RES, CBN 1/2P 330
653	R505	5135-224522	RES, CBN 1/2P 220K
653	R506	5135-224522	RES, CBN 1/2P 220K
652	R507	5135-394522	RES, CBN 1/2P 390K
652	R508	5135-394522	RES, CBN 1/2P 390K
670	R511	5135-331522	RES, CBN 1/2P 330
670	R512	5135-331522	RES, CBN 1/2P 330
654	R519	5135-473522	RES, CBN 1/2P 47K
654	R520	5135-473522	RES, CBN 1/2P 47K
655	R521	5135-332522	RES, CBN 1/2P 3.3K
655	R522	5135-332522	RES, CBN 1/2P 3.3K
655	R523	5135-332522	RES, CBN 1/2P 3.3K
655	R524	5135-332522	RES, CBN 1/2P 3.3K
656	R525	5135-471522	RES, CBN 1/2P 470
656	R526	5135-471522	RES, CBN 1/2P 470
656	R527	5135-471522	RES, CBN 1/2P 470
656	R528	5135-471522	RES, CBN 1/2P 470
657	R529	5135-331522	RES, CBN 1/2P 330
657	R530	5135-331522	RES, CBN 1/2P 330
658	R531	5135-222522	RES, CBN 1/2P 2.2K
658	R532	5135-222522	RES, CBN 1/2P 2.2K
658	R533	5135-222522	RES, CBN 1/2P 2.2K
658	R534	5135-222522	RES, CBN 1/2P 2.2K
659	R535	5135-274522	RES, CBN 1/2P 270K
659	R536	5135-274522	RES, CBN 1/2P 270K

Ser. No.	Ref. No.	Part No.	Description
660	R537	5135-153522	RES, CBN 1/2P 15K
660	R538	5135-153522	RES, CBN 1/2P 15K
657	R539	5135-331522	RES, CBN 1/2P 330
657	R540	5135-331522	RES, CBN 1/2P 330
657	R541	5135-331522	RES, CBN 1/2P 330
657	R542	5135-331522	RES, CBN 1/2P 330
661	R553	5135-121522	RES, CBN 1/2P 120
661	R554	5135-121522	RES, CBN 1/2P 120
654	R555	5135-473522	RES, CBN 1/2P 47K
654	R556	5135-473522	RES, CBN 1/2P 47K
658	R561	5135-222522	RES, CBN 1/2P 2.2K
658	R562	5135-222522	RES, CBN 1/2P 2.2K
611	R901	5135-102522	RES, CBN 1/2P 1K
611	R902	5135-102522	RES, CBN 1/2P 1K
610	R905	5135-104522	RES, CBN 1/2P 100K
610	R906	5135-104522	RES, CBN 1/2P 100K
604	R907	5135-332522	RES, CBN 1/2P 3.3K
604	R908	5135-332522	RES, CBN 1/2P 3.3K
604	R909	5135-332522	RES, CBN 1/2P 3.3K
604	R910	5135-332522	RES, CBN 1/2P 3.3K
605	R911	5135-183522	RES, CBN 1/2P 18K
605	R912	5135-183522	RES, CBN 1/2P 18K
606	R913	5135-472522	RES, CBN 1/2P 4.7K
606	R914	5135-472522	RES, CBN 1/2P 4.7K
608	R915	5135-562522	RES, CBN 1/2P 5.6K
608	R916	5135-562522	RES, CBN 1/2P 5.6K
604	R917	5135-332522	RES, CBN 1/2P 3.3K
604	R918	5135-332522	RES, CBN 1/2P 3.3K
606	R919	5135-472522	RES, CBN 1/2P 4.7K
606	R920	5135-472522	RES, CBN 1/2P 4.7K
607	R921	5135-331522	RES, CBN 1/2P 330
607	R922	5135-331522	RES, CBN 1/2P 330
604	R923	5135-332522	RES, CBN 1/2P 3.3K
604	R924	5135-332522	RES, CBN 1/2P 3.3K
609	R925	5135-221522	RES, CBN 1/2P 220
609	R926	5135-221522	RES, CBN 1/2P 220
607	R927	5135-331522	RES, CBN 1/2P 330
607	R928	5135-331522	RES, CBN 1/2P 330
610	R929	5135-104522	RES, CBN 1/2P 100K
610	R930	5135-104522	RES, CBN 1/2P 100K
		TRANSISTORS	
693	Q11	5614-667A (C)	XISTOR, NPN A
694	Q12	5612-647A (C)	XISTOR, PNP A
621	Q501	5613-2320L (F)	XISTOR, NPN R
621	Q502	5613-2320L (F)	XISTOR, NPN R
621	Q503	5613-2320L (F)	XISTOR, NPN R
621	Q504	5613-2320L (F)	XISTOR, NPN R
622	Q505	5613-2320L (F)	XISTOR, NPN R
622	Q506	5613-2320L (F)	XISTOR, NPN R
622	Q507	5613-2320L (F)	XISTOR, NPN R
622	Q508	5613-2320L (F)	XISTOR, NPN R
623	Q509	5611-999L (F)	XISTOR, PNP R
623	Q510	5611-999L (F)	XISTOR, PNP R
622	Q511	5613-2320L (F)	XISTOR, NPN R
622	Q512	5613-2320L (F)	XISTOR, NPN R
623	Q513	5611-999L (F)	XISTOR, PNP R
623	Q514	5611-999L (F)	XISTOR, PNP R
625	Q515	5612-646 (C)	XISTOR, PNP A
625	Q516	5612-646 (C)	XISTOR, PNP A
624	Q517	5614-666 (C)	XISTOR, NPN A
624	Q518	5614-666 (C)	XISTOR, NPN A
591	Q901	5613-2240 (BL)	XISTOR, NPN R
591	Q902	5613-2240 (BL)	XISTOR, NPN R
592	Q903	5611-970 (BL)	XISTOR, PNP R
592	Q904	5611-970 (BL)	XISTOR, PNP R
591	Q905	5613-2240 (BL)	XISTOR, NPN R
591	Q906	5613-2240 (BL)	XISTOR, NPN R
593	Q908	5616-2SK246 (Y)	FET, N-CH
593	Q909	5616-2SK246 (Y)	FET, N-CH
		DIODES	
697	D11	5635-HZ15-2L	DIODE, ZENER
697	D12	5635-HZ15-2L	DIODE, ZENER
627	D503	5631-1S2473	DIODE, DET
627	D504	5631-1S2473	DIODE, DET

Ser. No.	Ref. No.	Part No.	Description
		CONTROLS	
883	VR501/502	5113-S1801503	RES, V CBN 16 50K, BALANCE
879	VR505/506	5113-S1701503	RES, V CBN 16 50K, TREBLE
881	VR507/508	5113-S1601104	RES, V CBN 16 100K, BASS
		MISCELLANEOUS	
939	JL501	4242-R0503201	JUMPER LEAD
941	JL503	4242-R0507181	JUMPER LEAD
942	JL504	4242-R0507551	JUMPER LEAD
943	JL505	4242-R0505800	JUMPER LEAD
944	JL506	4242-R0507551	JUMPER LEAD
940	JL508	4242-R0507800	JUMPER LEAD
940	JL509	4242-R0507800	JUMPER LEAD
940	JL510	4242-R0507800	JUMPER LEAD
940	JL511	4242-R0507800	JUMPER LEAD
946	JL515	4242-R0503501	JUMPER LEAD
949	JL517	4242-R0504181	JUMPER LEAD
921	LCN544	4163-0155039	CONNECTOR W/W
920	LCN545	4163-0165039	CONNECTOR W/W
922	LCN547	4163-0140039	CONNECTOR W/W
867	SW1	4412-00102045	SWITCH, ROTARY-SLIDE, SOURCE
867	SW2	4412-00102045	SWITCH, ROTARY-SLIDE, RECORD OUT
869	SW3	4412-00101043	SWITCH, RORARY-SLIDE, TAPE MONITOR
925		2240-Z052	HOLDER, JL505
926		2240-Z072	HOLDER, JL503
926		2240-Z072	HOLDER, JL508
926		2240-Z072	HOLDER, JL509
926		2240-Z072	HOLDER, JL510
926		2240-Z072	HOLDER, JL511
927		2240-Z042	HOLDER, JL517
928		2240-Z032	HOLDER, JL501
933		2240-Z032	HOLDER, JL515
936		2240-Z031	HOLDER, W503
936		2240-Z031	HOLDER, W507

PCB-6 TONE 2 P.C. BOARD

Ser. No.	Ref. No.	Part No.	Description
		CAPACITORS	
613	C503	5354-394593	CAP, MYL .39μ
613	C504	5354-394593	CAP, MYL .39μ
641	C531	5354-154593	CAP, MYL .15μ
641	C532	5354-154593	CAP, MYL .15μ
642	C533	5354-273J1HM	CAP, MYL .027μ
642	C534	5354-273J1HM	CAP, MYL .027μ
647	C535	5354-682J1HM	CAP, MYL 6800P
647	C536	5354-682J1HM	CAP, MYL 6800P
648	C537	5354-393J1HM	CAP, MYL .039μ
648	C538	5354-393J1HM	CAP, MYL .039μ
		RESISTORS	
672	R543	5135-331522	RES, CBN 1/2P 330
672	R544	5135-331522	RES, CBN 1/2P 330
667	R545	5135-153522	RES, CBN 1/2P 15K
667	R546	5135-153522	RES, CBN 1/2P 15K
662	R547	5135-272522	RES, CBN 1/2P 2.7K
662	R548	5135-272522	RES, CBN 1/2P 2.7K
666	R549	5135-331522	RES, CBN 1/2P 330
666	R550	5135-331522	RES, CBN 1/2P 330
669	R551	5135-122522	RES, CBN 1/2P 1.2K
669	R552	5135-122522	RES, CBN 1/2P 1.2K
667	R557	5135-153522	RES, CBN 1/2P 15K
667	R558	5135-153522	RES, CBN 1/2P 15K
668	R559	5135-272522	RES, CBN 1/2P 2.7K
668	R560	5135-272522	RES, CBN 1/2P 2.7K
		MISCELLANEOUS	
923	LCN546	4163-0135039	CONNECTOR W/W
862	SW6	4431-S0117308	SWITCH, PUSH, PHASE CORRECT LOUDNESS, SUBSONIC, MONO

Ser. No.	Ref. No.	Part No.	Description
863	SW7	4431-S0118104	SWITCH, PUSH, TONE DEFEAT
929		2240-Z072	HOLDER, JL508
929		2240-Z072	HOLDER, JL509
929		2240-Z072	HOLDER, JL510
929		2240-Z072	HOLDER, JL511
930		2240-Z052	HOLDER, JL505
937		2240-Z031	HOLDER, W501
937		2240-Z031	HOLDER, W502

PCB-7 VOLUME P.C. BOARD

Ser. No.	Ref. No.	Part No.	Description
		CAPACITORS	
420	C209	5345-106C041	CAP, MINI ELE 10μ/16V
416	C210	5354-104593	CAP, MYL .1μ
419	C211	5354-103593	CAP, MYL .01μ
		RESISTORS	
421 ⚠	R230	5102-2204713	RES, FUSE 22
673	R270	5135-472522	RES, CBN 1/2P 4.7K
673	R271	5135-472522	RES, CBN 1/2P 4.7K
		INTEGRATED CIRCUIT	
417	IC203	5653-LB1641	IC, LINEAR
		DIODE	
418	D217	5635-HZ5A3	DIODE, ZENER
		CONTROL	
877	VR503/504	6161-00302	VR BLOCK, VOLUME (MOTOR DRIVE)
		MISCELLANEOUS	
463	CN202	4443-0601140	CONNECTOR
465	CN204	4443-0201140	CONNECTOR
912	CN208	4443-030185	CONNECTOR
915	CN209	4443-030185	CONNECTOR

PCB-8 BIAS (RCH) P. C. BOARD

Ser. No.	Ref. No.	Part No.	Description
		RESISTORS	
752	R802	5135-222522	RES, CBN 1/2P 2.2K
754	R804	5135-122522	RES, CBN 1/2P 1.2K
		TRANSISTOR	
756	Q802	5613-2682(Q)	XISTOR, NPN R
		MISCELLANEOUS	
740	CN802	4443-0201140	CONNECTOR

PCB-9 BIAS (LCH) P. C. BOARD

Ser. No.	Ref. No.	Part No.	Description
		RESISTORS	
751	R801	5135-222522	RES, CBN 1/2P 2.2K
753	R803	5135-122522	RES, CBN 1/2P 1.2K
		TRANSISTOR	
755	Q801	5613-2682 (Q)	XISTOR, NPN R
		MISCELLANEOUS	
739	CN801	4443-0201140	CONNECTOR

PCB-10 EQ P. C. BOARD

Ser. No.	Ref. No.	Part No.	Description
		CAPACITORS	
067B	C561	5359-S010J101	CAP, PPP 100P G GB
059B	C562	5359-S010J101	CAP, PPP 100P G GB
059B	C563	5359-S010J101	CAP, PPP 100P G GB
067B	C564	5359-S010J101	CAP, PPP 100P G GB
059B	C565	5359-S010J101	CAP, PPP 100P G GB
059B	C566	5359-S010J101	CAP, PPP 100P G GB
545	C601	5345-S19DM106	CAP, MINI ELE 10μ/25V
545	C602	5345-S19DM106	CAP, MINI ELE 10μ/25V
555	C603	5353-121534	CAP, MCA 120P
555	C604	5353-121534	CAP, MCA 120P
554	C605	5359-1015851	CAP, PPP 100P
554	C606	5359-1015851	CAP, PPP 100P
546	C607	5345-477B0952	CAP, MINI ELE 470μ/10V
546	C608	5345-477B0952	CAP, MINI ELE 470μ/10V
548	C609	5345-226C041	CAP, MINI ELE 22μ/16V
548	C610	5345-226C041	CAP, MINI ELE 22μ/16V
551	C611	5359-1825851	CAP, PPP 1800P
551	C612	5359-1825851	CAP, PPP 1800P
552	C613	5359-5625851	CAP, PPP 5600P
552	C614	5359-5625851	CAP, PPP 5600P
550	C615	5359-2215851	CAP, PPP 220P
550	C616	5359-2215851	CAP, PPP 220P
556	C619	5354-562J1HM	CAP, MYL 5600P
556	C620	5354-562J1HM	CAP, MYL 5600P
547	C623	5345-S19FM106	CAP, MINI ELE 10μ/50V
547	C624	5345-S19FM106	CAP, MINI ELE 10μ/50V
686 ⚠	C625	5345-337G0962	CAP, MINI ELE 330μ/63V
686 ⚠	C626	5345-337G0962	CAP, MINI ELE 330μ/63V
686	C627	5345-337G0962	CAP, MINI ELE 330μ/63V
686	C628	5345-337G0962	CAP, MINI ELE 330μ/63V
053B	C681	5353-330534	CAP, MCA 33P G GB
053B	C682	5353-330534	CAP, MCA 33P G GB
052B	C683	5354-473593	CAP, MYL .047μ G GB
052B	C684	5354-473593	CAP, MYL .047μ G GB
051B	C685	5359-6815851	CAP, PPP 680P G GB
051B	C686	5359-6815851	CAP, PPP 680P G GB
058B	C687	5361-223ZF	CAP, CER .022μ G GB
072B	C688	5361-331KB	CAP, CER 330P G GB
072B	C689	5361-331KB	CAP, CER 330P G GB
512	C703	5345-S19FM106	CAP, MINI ELE 10μ/50V
512	C704	5345-S19FM106	CAP, MINI ELE 10μ/50V
512	C705	5345-S19FM106	CAP, MINI ELE 10μ/50V
512	C706	5345-S19FM106	CAP, MINI ELE 10μ/50V
511	C707	5345-337C041	CAP, MINI ELE 330μ/16V
511	C708	5345-337C041	CAP, MINI ELE 330μ/16V
511	C709	5345-337C041	CAP, MINI ELE 330μ/16V
511	C710	5345-337C041	CAP, MINI ELE 330μ/16V
587	C808	5354-102J1HM	CAP, MYL 1000P
		RESISTORS	
061B	R565	5232-102J16P	RES, CBN 1/6P 1K G GB
061B	R566	5232-102J16P	RES, CBN 1/6P 1K G GB
061B	R567	5232-102J16P	RES, CBN 1/6P 1K G GB
061B	R568	5232-102J16P	RES, CBN 1/6P 1K G GB
061B	R569	5232-102J16P	RES, CBN 1/6P 1K G GB
061B	R570	5232-102J16P	RES, CBN 1/6P 1K G GB
567	R601	5135-470522	RES, CBN 1/2P 47
567	R602	5135-470522	RES, CBN 1/2P 47
580	R603	5135-823522	RES, CBN 1/2P 82K
580	R604	5135-823522	RES, CBN 1/2P 82K
568	R605	5135-124522	RES, CBN 1/2P 120K
568	R606	5135-124522	RES, CBN 1/2P 120K
569	R607	5135-473522	RES, CBN 1/2P 47K
569	R608	5135-473522	RES, CBN 1/2P 47K
570	R609	5135-332522	RES, CBN 1/2P 3.3K
570	R610	5135-332522	RES, CBN 1/2P 3.3K
570	R611	5135-332522	RES, CBN 1/2P 3.3K
570	R612	5135-332522	RES, CBN 1/2P 3.3K
581	R613	5135-331522	RES, CBN 1/2P 330
581	R614	5135-331522	RES, CBN 1/2P 330
581	R615	5135-331522	RES, CBN 1/2P 330
581	R616	5135-331522	RES, CBN 1/2P 330
581	R617	5135-331522	RES, CBN 1/2P 330
581	R618	5135-331522	RES, CBN 1/2P 330
581	R619	5135-331522	RES, CBN 1/2P 330
581	R620	5135-331522	RES, CBN 1/2P 330
561	R621	5174-751381	RES, MTL 1/4P 750
561	R622	5174-751381	RES, MTL 1/4P 750
571	R623	5135-222522	RES, CBN 1/2P 2.2K
571	R624	5135-222522	RES, CBN 1/2P 2.2K
571	R625	5135-222522	RES, CBN 1/2P 2.2K
571	R626	5135-222522	RES, CBN 1/2P 2.2K
565	R627	5174-102381	RES, MTL 1/4P 1K
565	R628	5174-102381	RES, MTL 1/4P 1K
572	R629	5135-682522	RES, CBN 1/2P 6.8K

Ser. No.	Ref. No.	Part No.	Description
572	R630	5135-682522	RES, CBN 1/2P 6.8K
572	R631	5135-682522	RES, CBN 1/2P 6.8K
572	R632	5135-682522	RES, CBN 1/2P 6.8K
573	R633	5135-471522	RES, CBN 1/2P 470
573	R634	5135-471522	RES, CBN 1/2P 470
573	R635	5135-471522	RES, CBN 1/2P 470
573	R636	5135-471522	RES, CBN 1/2P 470
576	R637	5135-330522	RES, CBN 1/2P 33
576	R638	5135-330522	RES, CBN 1/2P 33
576	R639	5135-330522	RES, CBN 1/2P 33
576	R640	5135-330522	RES, CBN 1/2P 33
574	R641	5174-Z412238	RES, MTL 1/4P 41.2K
574	R642	5174-Z412238	RES, MTL 1/4P 41.2K
563	R645	5174-125381	RES, MTL 1/4P 1.2M
563	R646	5174-125381	RES, MTL 1/4P 1.2M
564	R647	5174-135381	RES, MTL 1/4P 1.3M
564	R648	5174-135381	RES, MTL 1/4P 1.3M
577	R649	5135-331522	RES, CBN 1/2P 330
577	R650	5135-331522	RES, CBN 1/2P 330
579	R651	5135-104522	RES, CBN 1/2P 100K
579	R652	5135-104522	RES, CBN 1/2P 100K
689	R653	5135-822522	RES, CBN 1/2P 8.2K
689	R654	5135-822522	RES, CBN 1/2P 8.2K
687 ⚠	R655	5102-2205116	RES, FUSE 22
687 ⚠	R656	5102-2205116	RES, FUSE 22
690 ⚠	R657	5102-2205116	RES, FUSE 22
690 ⚠	R658	5102-2205116	RES, FUSE 22
562	R661	5135-474522	RES, CBN 1/2P 470K
562	R662	5135-474522	RES, CBN 1/2P 470K
690 ⚠	R667	5102-2205116	RES, FUSE 22
690 ⚠	R668	5102-2205116	RES, FUSE 22
055B	R681	5135-102522	RES, CBN 1/2P 1K G GB
055B	R682	5135-102522	RES, CBN 1/2P 1K G GB
055B	R683	5135-102522	RES, CBN 1/2P 1K G GB
055B	R684	5135-102522	RES, CBN 1/2P 1K G GB
516	R701	5135-1R0522	RES, CBN 1/2P 1 BK
516B	R701	5135-5R6522	RES, CBN 1/2P 5.6 G GB IB WB
516	R702	5135-1R0522	RES, CBN 1/2P 1 BK
516B	R702	5135-5R6522	RES, CBN 1/2P 5.6 G GB IB WB
519	R703	5135-560522	RES, CBN 1/2P 56
519	R704	5135-560522	RES, CBN 1/2P 56
521	R705	5135-472522	RES, CBN 1/2P 4.7K
521	R706	5135-472522	RES, CBN 1/2P 4.7K
521	R707	5135-472522	RES, CBN 1/2P 4.7K
521	R708	5135-472522	RES, CBN 1/2P 4.7K
517	R709	5135-100522	RES, CBN 1/2P 10
517	R710	5135-100522	RES, CBN 1/2P 10
517	R711	5135-100522	RES, CBN 1/2P 10
517	R712	5135-100522	RES, CBN 1/2P 10
518	R713	5135-220522	RES, CBN 1/2P 22
518	R714	5135-220522	RES, CBN 1/2P 22
518	R715	5135-220522	RES, CBN 1/2P 22
518	R716	5135-220522	RES, CBN 1/2P 22
515	R717	5174-561381	RES, MTL 1/4P 560
515	R718	5174-561381	RES, MTL 1/4P 560
515	R719	5174-561381	RES, MTL 1/4P 560
515	R720	5174-561381	RES, MTL 1/4P 560
520	R721	5135-392522	RES, CBN 1/2P 3.9K
520	R722	5135-392522	RES, CBN 1/2P 3.9K
522	R723	5135-681522	RES, CBN 1/2P 680
522	R724	5135-681522	RES, CBN 1/2P 680
523	R727	5135-331522	RES, CBN 1/2P 330
523	R728	5135-331522	RES, CBN 1/2P 330
588	R816	5135-104522	RES, CBN 1/2P 100K
588	R817	5135-104522	RES, CBN 1/2P 100K
589	R818	5135-103522	RES, CBN 1/2P 10K
590	R819	5135-105522	RES, CBN 1/2P 1M
		TRANSISTORS	
531	Q601	5613-2240(BL)	XISTOR, NPN R
531	Q602	5613-2240(BL)	XISTOR, NPN R
531	Q603	5613-2240(BL)	XISTOR, NPN R
531	Q604	5613-2240(BL)	XISTOR, NPN R
532	Q605	5613-2320L(F)	XISTOR, NPN R
532	Q606	5613-2320L(F)	XISTOR, NPN R
532	Q607	5613-2320L(F)	XISTOR, NPN R
532	Q608	5613-2320L(F)	XISTOR, NPN R
533	Q609	5611-999L(F)	XISTOR, PNP R
533	Q610	5611-999L(F)	XISTOR, PNP R
538	Q611	5613-2320L(F)	XISTOR, NPN R
538	Q612	5613-2320L(F)	XISTOR, NPN R
533	Q613	5611-999L (F)	XISTOR, PNP R
533	Q614	5611-999L (F)	XISTOR, PNP R
535	Q615	5612-646 (C)	XISTOR, PNP A
535	Q616	5612-646 (C)	XISTOR, PNP A
534	Q617	5614-666 (C)	XISTOR, NPN A
534	Q618	5614-666 (C)	XISTOR, NPN A
536	Q619	5614-667 (C)	XISTOR, NPN A
536	Q620	5614-667 (C)	XISTOR, NPN A
537	Q621	5612-647 (C)	XISTOR, PNP A
537	Q622	5612-647 (C)	XISTOR, PNP A
681	Q623	5613-3298(Y)	XISTOR, NPN R
683	Q624	5611-1306 (Y)	XISTOR, PNP R
502	Q701	5611-1190 (E)	XISTOR, PNP R
502	Q702	5611-1190 (E)	XISTOR, PNP R
501	Q703	5613-2855 (D)	XISTOR, NPN R
501	Q704	5613-2855 (D)	XISTOR, NPN R
501	Q705	5613-2855 (D)	XISTOR, NPN R
501	Q706	5613-2855 (D)	XISTOR, NPN R
502	Q707	5611-1190 (E)	XISTOR, PNP R
502	Q708	5611-1190 (E)	XISTOR, PNP R
503	Q709	5613-1740S (S)	XISTOR, NPN R
504	Q710	5611-933S (S)	XISTOR, PNP R
504	Q711	5611-933S (S)	XISTOR, PNP R
503	Q712	5613-1740S (S)	XISTOR, NPN R
505	Q713	5616-2SK373GR	FET, N-CH
505	Q714	5616-2SK373GR	FET, N-CH
585	Q803	5611-933S (S)	XISTOR, PNP R
585	Q804	5611-933S (S)	XISTOR, PNP R
586	Q805	5616-2SK364 (V)	FET, N-CH
586	Q806	5616-2SK364 (V)	FET, N-CH
		DIODES	
541	D601	5631-1S2473	DIODE, DET
541	D602	5631-1S2473	DIODE, DET
542	D603	5631-1SS133	DIODE, DET
542	D604	5631-1SS133	DIODE, DET
685	D605	5635-HZ24-2L	DIODE, ZENER
685	D606	5635-HZ24-2L	DIODE, ZENER
542	D607	5631-1SS133	DIODE, DET
542	D608	5631-1SS133	DIODE, DET
542	D609	5631-1SS133	DIODE, DET
542	D610	5631-1SS133	DIODE, DET
508	D701	5635-HZ15-1L	DIODE, ZENER
508	D702	5635-HZ15-1L	DIODE, ZENER
		MISCELLANEOUS	
914	CN304	4443-070185	CONNECTOR
911	CN402	4443-030185	CONNECTOR
911	CN501	4443-030185	CONNECTOR
911	CN507	4443-030185	CONNECTOR
892 ⚠	J4	4484-31	PIN JACK, 4P, PHONO MM/MC
893 ⚠	J5	4486-9	PIN JACK, 6P, TUNER/CD/VIDEO
056B	L701	5597-3	CORE, BEADS, W-648 G GB
056B	L702	5597-3	CORE, BEADS, W-650 G GB
583	LCN517	4163-0125039	CONNECTOR W/W
525	LCN701	4163-0125020	CONNECTOR W/W
865	SW9	4422-70211	SWITCH, REMOTE, CARTRIDGE

PCB-11 TAPE IN/OUT P. C. BOARD

Ser. No.	Ref. No.	Part No.	Description
		CAPACITORS	
060B	C567	5361-101KB	CAP, CER 100P G GB
060B	C568	5361-101KB	CAP, CER 100P G GB
060B	C569	5361-101KB	CAP, CER 100P G GB

Ser. No.	Ref. No.	Part No.	Description
060B	C570	5361-101KB	CAP, CER 100P G GB
060B	C571	5361-101KB	CAP, CER 100P G GB
060B	C572	5361-101KB	CAP, CER 100P G GB
060B	C573	5361-101KB	CAP, CER 100P G GB
060B	C574	5361-101KB	CAP, CER 100P G GB
060B	C575	5361-101KB	CAP, CER 100P G GB
060B	C576	5361-101KB	CAP, CER 100P G GB
070B	C801	5359-S010J331	CAP, PPP 330P G GB
070B	C802	5359-S010J331	CAP, PPP 330P G GB
071B	C803	5359-S010J101	CAP, PPP 100P G GB
071B	C804	5359-S010J101	CAP, PPP 100P G GB
		RESISTORS	
063B	R571	5232-102J16P	RES, CBN 1/6P 1K G GB
063B	R572	5232-102J16P	RES, CBN 1/6P 1K G GB
063B	R573	5232-102J16P	RES, CBN 1/6P 1K G GB
063B	R574	5232-102J16P	RES, CBN 1/6P 1K G GB
063B	R575	5232-102J16P	RES, CBN 1/6P 1K G GB
063B	R576	5232-102J16P	RES, CBN 1/6P 1K G GB
063B	R577	5232-102J16P	RES, CBN 1/6P 1K G GB
063B	R578	5232-102J16P	RES, CBN 1/6P 1K G GB
063B	R579	5232-102J16P	RES, CBN 1/6P 1K G GB
063B	R580	5232-102J16P	RES, CBN 1/6P 1K G GB
619	R585	5135-102522	RES, CBN 1/2P 1K
619	R586	5135-102522	RES, CBN 1/2P 1K
671	R587	5135-391522	RES, CBN 1/2P 390
671	R588	5135-391522	RES, CBN 1/2P 390
618	R589	5135-471522	RES, CBN 1/2P 470
618	R590	5135-471522	RES, CBN 1/2P 470
		MISCELLANEOUS	
918	CN106	4443-030185	CONNECTOR
916	CN504	4443-070185	CONNECTOR
916	CN506	4443-070185	CONNECTOR
918	CN518	4443-030185	CONNECTOR
891 ⚠	J2	4484-47	PIN JACK, 4P, PRE-OUT/MAIN-IN
891 ⚠	J3	4484-47	PIN JACK, 4P, TAPE 1
894 ⚠	J6	4486-16	PIN JACK, 6P, TAPE 2/AUX
679	LCN520	4163-0136039	CONNECTOR W/W
875	SW5	4421-02601042	SWITCH, SLIDE, INTEGRATED/SEPARATE
934		2240-Z031	HOLDER, W504

PCB-12 HEADPHONES P. C. BOARD

Ser. No.	Ref. No.	Part No.	Description
		MISCELLANEOUS	
886	J1	4451-51501	JACK,1P, HEADPHONES
906		2240-Z031	HOLDER, W510

PCB-13 SPEAKER OPERATILNG MODE P. C. BOARD

Ser. No.	Ref. No.	Part No.	Description
		CAPACITORS	
835	C250	5354-104593	CAP, MYL .1μ BK WB
835	C251	5354-104593	CAP, MYL .1μ BK WB
835	C252	5354-104593	CAP, MYL .1μ BK WB
835	C253	5354-104593	CAP, MYL .1μ BK WB
		MISCELLANEOUS	
950	LCN250	4163-0118020	CONNECTOR W/W BK WB
951	LCN251	4163-0118021	CONNECTOR W/W BK WB
953	LCN252	4163-0118022	CONNECTOR W/W BK WB
954	LCN253	4163-0118023	CONNECTOR W/W BK WB
945	LCN522	4163-0125021	CONNECTOR W/W BK WB
956	LCN523	4163-0125023	CONNECTOR W/W BK WB
866 ⚠	SW202	4464-00102022	SWITCH, SEESAW, SPEAKER OPERATING MODE BK WB

PCB-14 REMOTE P. C. BOARD

Ser. No.	Ref. No.	Part No.	Description
		CAPACITORS	
438	C206	5345-476B041	CAP, MINI ELE 47μ/10V
441	C207	5361-101JCH	CAP, CER 100P
441	C208	5361-101JCH	CAP, CER 100P
427	C215	5345-106C0951	CAP, MINI ELE 10μ/16V
425	C218	5345-107B041	CAP, MINI ELE 100μ/10V
		RESISTORS	
439	R213	5135-103522	RES, CBN 1/2P 10K
439	R214	5135-103522	RES, CBN 1/2P 10K
428	R217	5135-102522	RES, CBN 1/2P 1K
428	R218	5135-102522	RES, CBN 1/2P 1K
439	R219	5135-103522	RES, CBN 1/2P 10K
442	R220	5135-105522	RES, CBN 1/2P 1M
440	R221	5135-473522	RES, CBN 1/2P 47K
440	R222	5135-473522	RES, CBN 1/2P 47K
429	R224	5135-472522	RES, CBN 1/2P 4.7K
429	R225	5135-472522	RES, CBN 1/2P 4.7K
440	R226	5135-473522	RES, CBN 1/2P 47K
440	R227	5135-473522	RES, CBN 1/2P 47K
440	R228	5135-473522	RES, CBN 1/2P 47K
440	R229	5135-473522	RES, CBN 1/2P 47K
443	R238	5135-101522	RES, CBN 1/2P 100
		INTEGRATED CIRCUITS	
431	IC201	5654-M761281P	IC, DIGITAL
432	IC202	5654-TC4028BP	IC, DIGITAL
		TRANSISTORS	
424	Q206	5611-933S(S)	XISTOR, PNP R
422	Q208	5611-A124ES	XISTOR, PNP R
433	Q209	5613-C144ES	XISTOR, NPN R
433	Q210	5613-C144ES	XISTOR, NPN R
		DIODES	
426	D206	5637-GL3ED8	LED, POWER/STANDBY
434	D207	5636-1S2473	DIODE, SWITCH
434	D208	5636-1S2473	DIODE, SWITCH
435 ⚠	D216	5635-HZ3A2	DIODE, ZENER
		MISCELLANEOUS	
467	CW201	4163-S0208351	CONNECTOR W/W
468	CW202	4163-S0206401	CONNECTOR W/W
469	CW203	4163-S0203301	CONNECTOR W/W
471	CW205	4163-S0203451	CONNECTOR W/W
437	RCV201	6143-00804	RECEIVER BLOCK, REMOTE SENSOR
436	X201	5693-CSB400P	OSC, CER

PCB-15 BACK UP P. C. BOARD

Ser. No.	Ref. No.	Part No.	Description
		CAPACITORS	
448	C213	5354-274593	CAP, MYL .27μ
448	C214	5354-274593	CAP, MYL .27μ
449 ⚠	C216	5352-S010M103	CAP, MTL .01μ BK
449B ⚠	C216	5352-1030958	CAP, MTL .01μ G GB IB WB
444	C219	5345-477D041	CAP, MINI ELE 470μ/25V
		RESISTOR	
042B ⚠	R241	5135-335522	RES, CBN 1/2P 3.3M G GB IB WB
		DIODES	
446	D202	5636-1S2473	DIODE, SWITCH
447 ⚠	D209	5632-S5566B	DIODE, RECT
447 ⚠	D210	5632-S5566B	DIODE, RECT
447 ⚠	D211	5632-S5566B	DIODE, RECT
447 ⚠	D212	5632-S5566B	DIODE, RECT
		MISCELLANEOUS	
460 ⚠	F201	5732-251031	FUSE, 250mA/125V BK
460B ⚠	F201	5732-251030	FUSE, T250mA/250V G GB IB WB
836 ⚠	F202	5732-632031	FUSE, 6.3A/125V BK
836B ⚠	F202	5732-312030	FUSE, T3.15A/250V G GB IB WB
461 ⚠	HF201	4472-04501	HOLDER, FUSE F201

Ser. No.	Ref. No.	Part No.	Description
461 ⚠	HF202	4472-04501	HOLDER, FUSE F201
461 ⚠	HF203	4472-04501	HOLDER, FUSE F202
461 ⚠	HF204	4472-04501	HOLDER, FUSE F202
466	JL206	4242-R0503201	JUMPER LEAD
450 ⚠	RL201	4331-01702	RELAY, DC
896 ⚠	SO201	4474-04301	SOCKET, AC OUTLET BK
041B ⚠	SW203	4411-00501102	SWITCH, ROTARY, VOLTAGE SELECTOR G GB IB WB
459 ⚠	T201	5584-001479	XFORMER, POWER, BACK UP BK
459B ⚠	T201	5584-T1101	XFORMER, POWER, BACK UP G GB IB WB
451	TM201	4214-122	TERMINAL
451	TM202	4214-122	TERMINAL
451	TM203	4214-122	TERMINAL
451	TM204	4214-122	TERMINAL
473		2240-Z032	HOLDER, JL206

PCB-16 REMOTE JACK P. C. BOARD

		CAPACITOR	
476	C220	5345-S19CM226	CAP, MINI ELE 22μ/16V
		RESISTORS	
452	R231	5135-271522	RES, CBN 1/2P 270
455	R232	5135-101522	RES, CBN 1/2P 100
456	R233	5135-392522	RES, CBN 1/2P 3.9K
454	R234	5135-470522	RES, CBN 1/2P 47
453	R235	5135-473522	RES, CBN 1/2P 47K
		TRANSISTOR	
423	Q211	5611-A143ES	XISTOR,PNP R
		MISCELLANEOUS	
472	CN205	4443-0301140	CONNECTOR
458	J201	4451-00184	JACK, 1P, REMOTE IN
458	J202	4451-00184	JACK, 1P, REMOTE OUT
457	PH201	5624-PC817	PHOTO COUPLER

PCB-17 VOLUME LED P. C. BOARD

		CAPACITOR	
903	C217	5345-S19CM106	CAP, MINI ELE 10μ/16V
		DIODE	
905	D201	5637-S2410E1	LED, VOLUME
		MISCELLANEOUS	
470	CW204	4163-01524002	CONNECTOR W/W

CHASSIS MISCELLANEOUS

		MISCELLANEOUS	
065B	LUG	4211-4	LUG G GB
900 ⚠	P1	4161-71151	CORD W/PLUG BK
900B ⚠	P1	4161-7256	CORD W/PLUG G GB IB WB
831 ⚠	T1	5584-T0801	XFORMER, POWER BK
831B ⚠	T1	5584-T0802	XFORMER, POWER G GB IB WB

PACKING PARTS LIST

	021	1756-06304	LABEL, 230V/50Hz G GB IB WB
	022	1756-03124	LABEL (G), (x2) G GB
	022	1756-03101	LABEL (W), (x2) WB
	022	1756-03108	LABEL (I), (x2) IB
	023	1111-J30235	OWNER GUIDE, POWER SWITCH CAUTION G GB IB
	027	1111-0370J152	OWNER GUIDE, VOLTAGE SELECTOR ADDENDUM WB
	107	1111-0290J152	OWNER GUIDE BK WB
	107	1111-0300J152	OWNER GUIDE G GB IB
	108	1113-02501	OWNER CARD, REPLY CARD BK
	109	1116-03801	GUARANTY CARD, WARRANTY BK
	110	1119-04501	ATTACH SHEET, SERVICE GUIDE BK
	111	1119-01201	ATTACH SHEET, UL BK
	121	1241-R0123351	POLYETHY BAG, OG
	122	1241-R0165751	POLYETHY BAG, SET
	124	1221-31401	CARTON BOX, ACCESSORY
	125	1221-867143	CARTON BOX G
	125	1221-877143	CARTON BOX BK GB IB WB
	126	1222-7225	CUSHION, R
	127	1222-7226	CUSHION, L
	128	1223-11729	SOFT SHEET
	477	6142-06805	REMOTE CONTROL
	478	4191-0355	BATTERY, DRY
	479	4161-08201102	CORD W/PLUG, REMOTE IN/OUT (x3)

ABBREVIATIONS IN PARTS LIST

CAPACITORS

CAP, MINI ELE	:	Electrolytic
CAP, CER	:	Ceramic
CAP, PPP	:	Polypropylene
CAP, MYL	:	Mylar
CAP, MCA	:	Mica
470μ	:	470μF
6800P	:	6800pF
.047μ	:	0.047μF

RESISTORS

RES, CBN	1/6P	:	Carbon 1/6W
	2.2K	:	2.2kΩ
	220	:	220Ω
RES, FUSE		:	Fuse
RES, CEM	5P	:	Cement 5W
RES, MTL	1P	:	Metal 1W

TRANSISTORS

XISTOR	:	Transistor
FET	:	Field Effect Transistor

CONTROLS

RES, V CBN	:	Variable Carbon Resistor
RES, SEMI FIX	:	Semi - fixed Resistors

NOTE:

⚠ SAFETY RELATED COMPONENT. USE ONLY EXACT REPLACEMENT PART AS SPECIFIED.

SCHEMATIC DIAGRAM (1)

PCB-10 EQ P. C. BOARD (1/2)

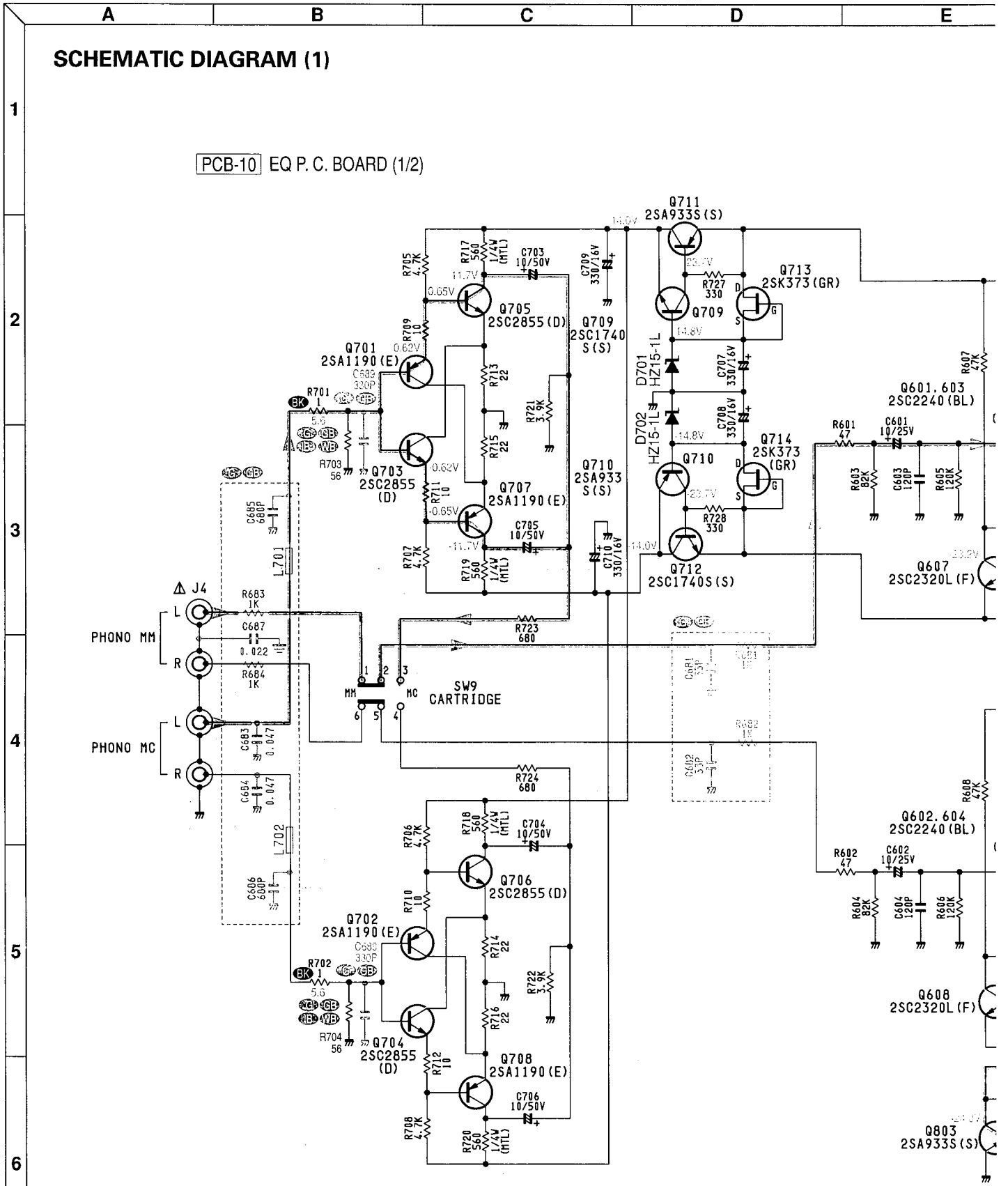

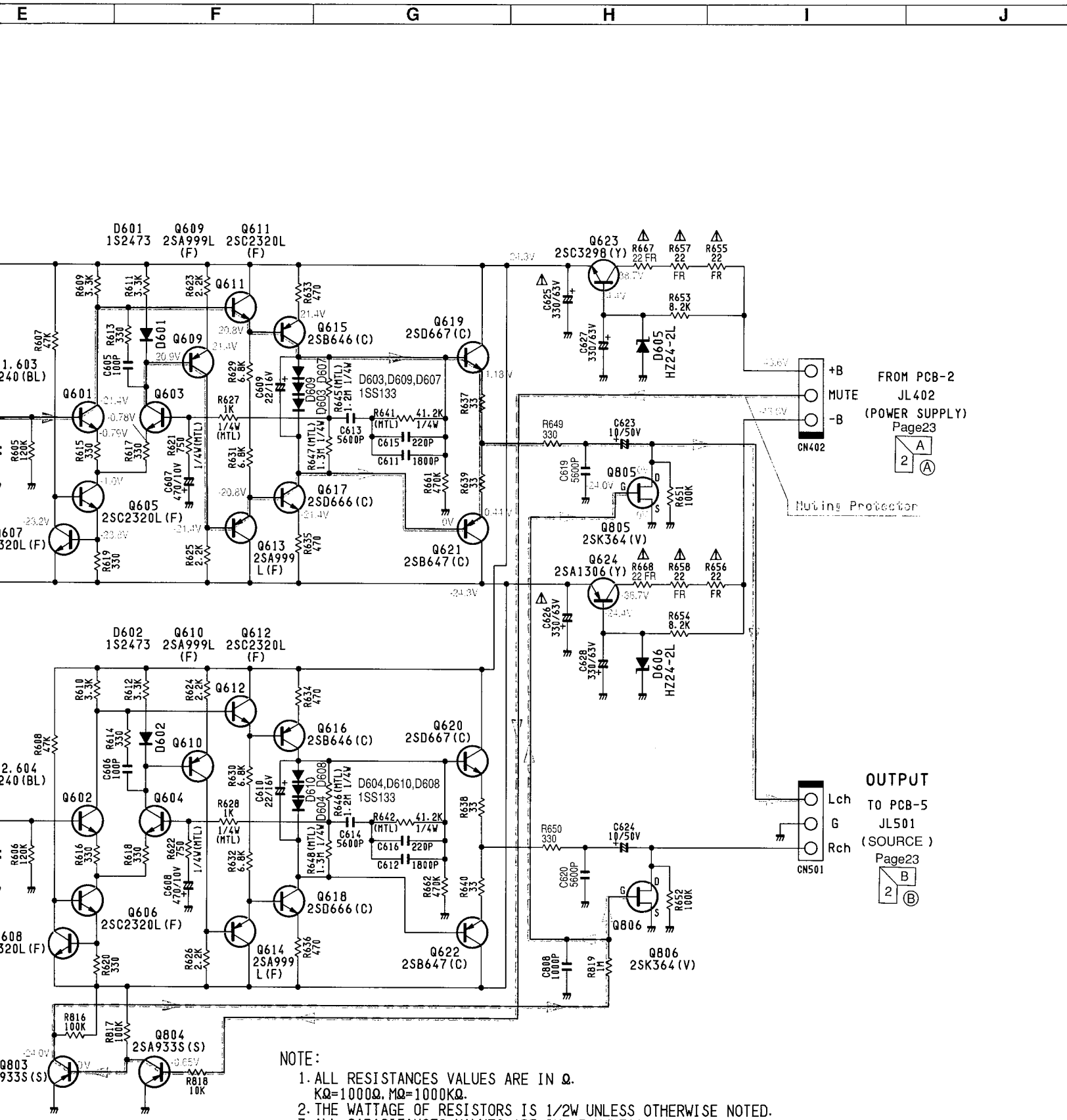

NOTE:

1. ALL RESISTANCES VALUES ARE IN Ω.
   KΩ=1000Ω, MΩ=1000KΩ.
2. THE WATTAGE OF RESISTORS IS 1/2W UNLESS OTHERWISE NOTED.
3. ALL CAPACITANCES VALUES ARE IN μF UNLESS OTHERWISE NOTED. P=μμF.
4. ⚠ SAFETY REQUIREMENTS COMPONENTS IN ACCORDANCE WITH PRESENT SAFETY REGULATIONS. THESE COMPONENTS MUST ONLY BE REPLACED BY ORIGINAL PARTS.

SCHEMATIC DIAGRAM (2)

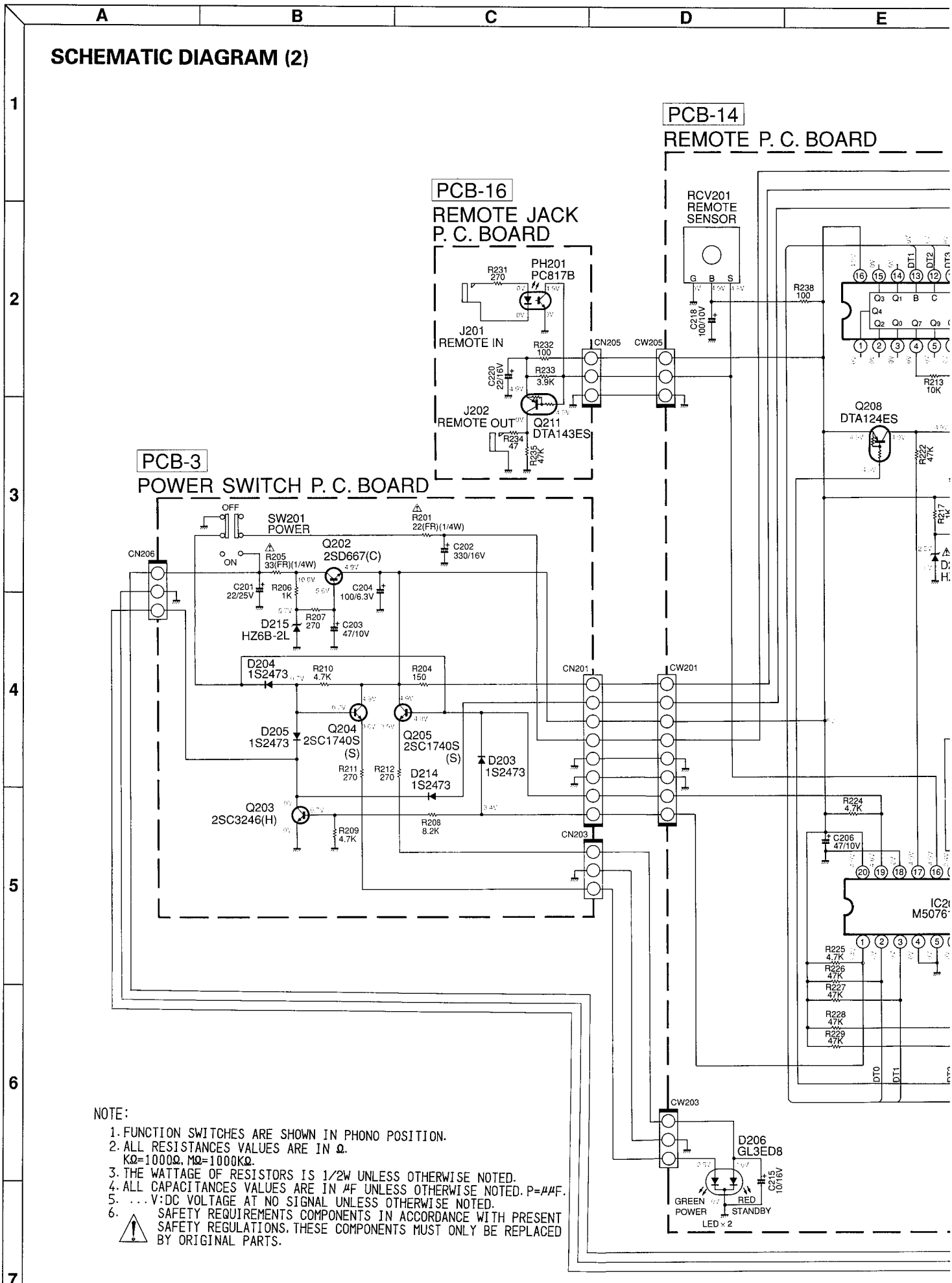

NOTE:

1. FUNCTION SWITCHES ARE SHOWN IN PHONO POSITION.
2. ALL RESISTANCES VALUES ARE IN Ω.
   KΩ=1000Ω, MΩ=1000KΩ.
3. THE WATTAGE OF RESISTORS IS 1/2W UNLESS OTHERWISE NOTED.
4. ALL CAPACITANCES VALUES ARE IN μF UNLESS OTHERWISE NOTED. P=μμF.
5. ...V:DC VOLTAGE AT NO SIGNAL UNLESS OTHERWISE NOTED.
6. ⚠ SAFETY REQUIREMENTS COMPONENTS IN ACCORDANCE WITH PRESENT SAFETY REGULATIONS. THESE COMPONENTS MUST ONLY BE REPLACED BY ORIGINAL PARTS.

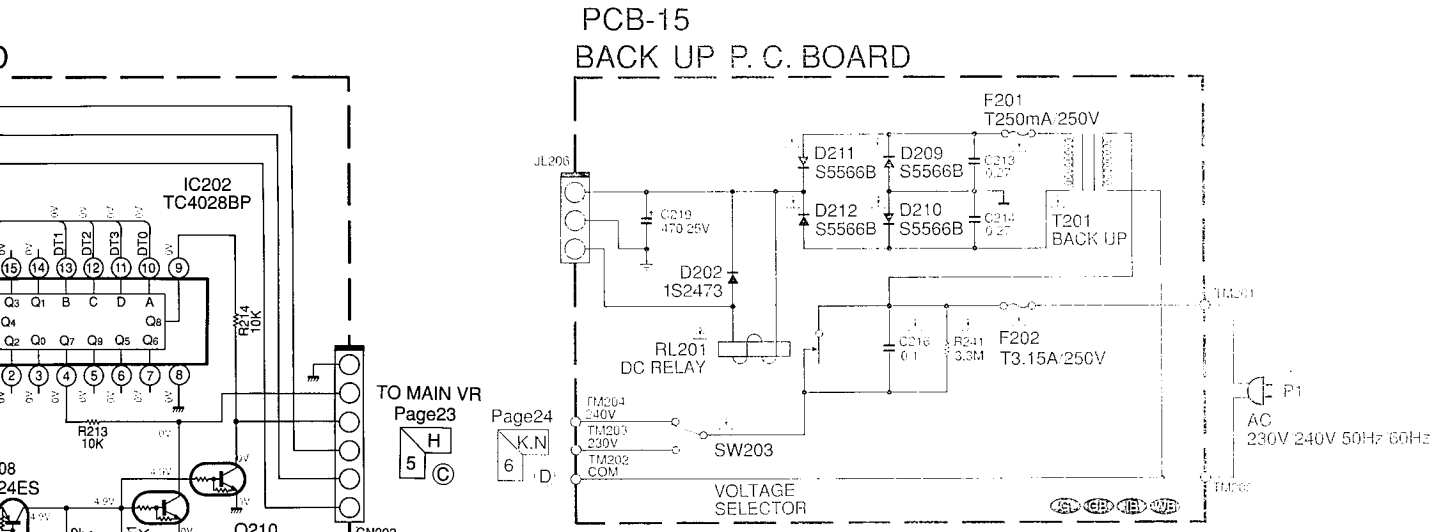

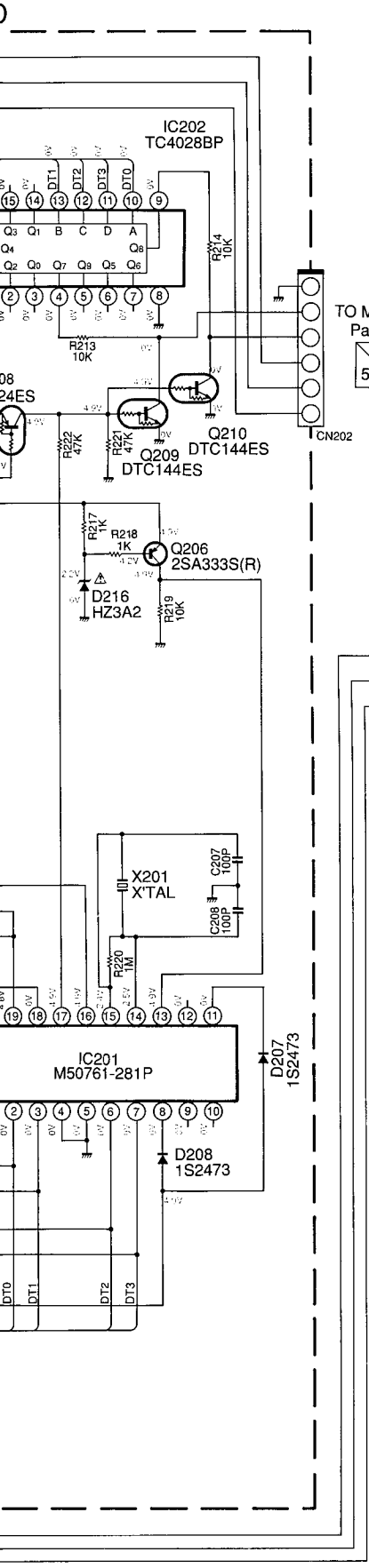

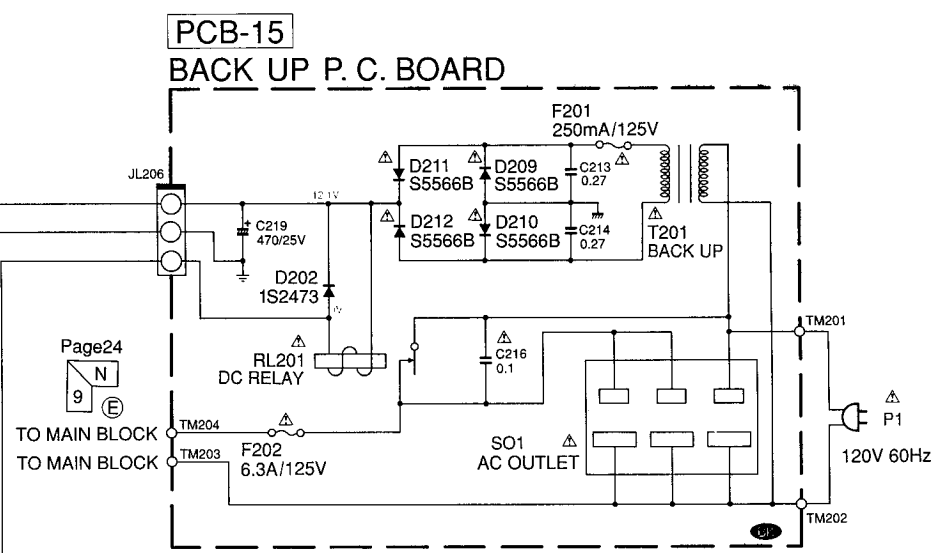

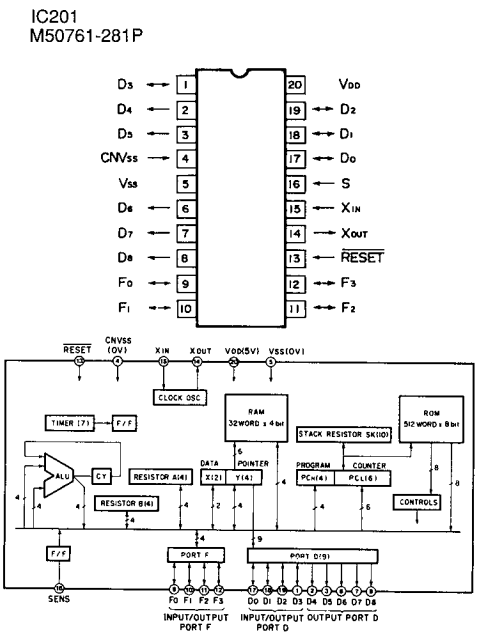

Pin No.	Pin Name	I/O	Function
1	I/O PORT D	I/O	9-bit terminal having output function on an independent bit basis. Output is open drain circuit for N channel transistor. Port D0 to D3 terminals have 4-bit input function. Programming output latch to "1" sets the output to floating (high impedance) state so that the terminals may be used as input port.
17		I/O	
18		I/O	
19		I/O	
2	OUT PORT D	O	
3		O	
6		O	
7		O	
8		O	
4	CNVss (0V)	—	Connect to Vss. Low input (0V) must be applied.
5	Vss (0V)	—	GND terminal
9	I/O PORT F	I/O	4-bit I/O terminal with output latch. Output is open drain circuit for N channel transistor. Programming port F output latch to "1" sets the output to floating (high impedance) state so that port F may be used as input port.
10		I/O	
11		I/O	
12		I/O	
13	$\overline{\text{RESET}}$	I	Sets to reset state by applying low level signal for two or more machine cycles.
14	XOUT	O	Connect external resistor R for oscillation CR in the clock generation circuit. Ceramic resonator may be connected.
15	XIN	I	
16	SENSE INPUT S	I	Sense input terminal active on leading edge. Sets flag to "1" when terminal S signal changes from low to high. Allows test and flag clear to be performed by command.
20	VDD (5V)	—	Positive power supply terminal.

SCHEMATIC DIAGRAM (3)

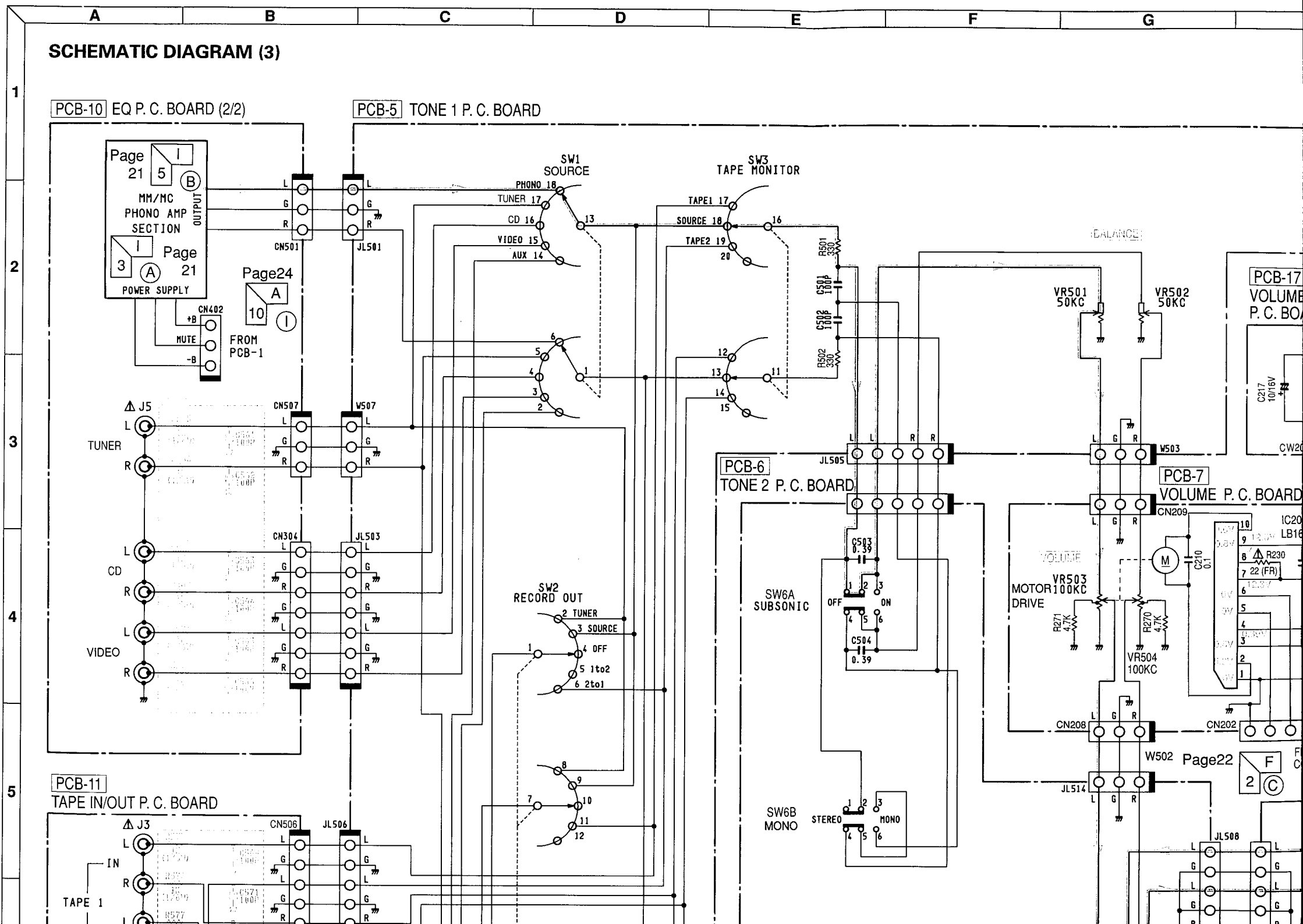

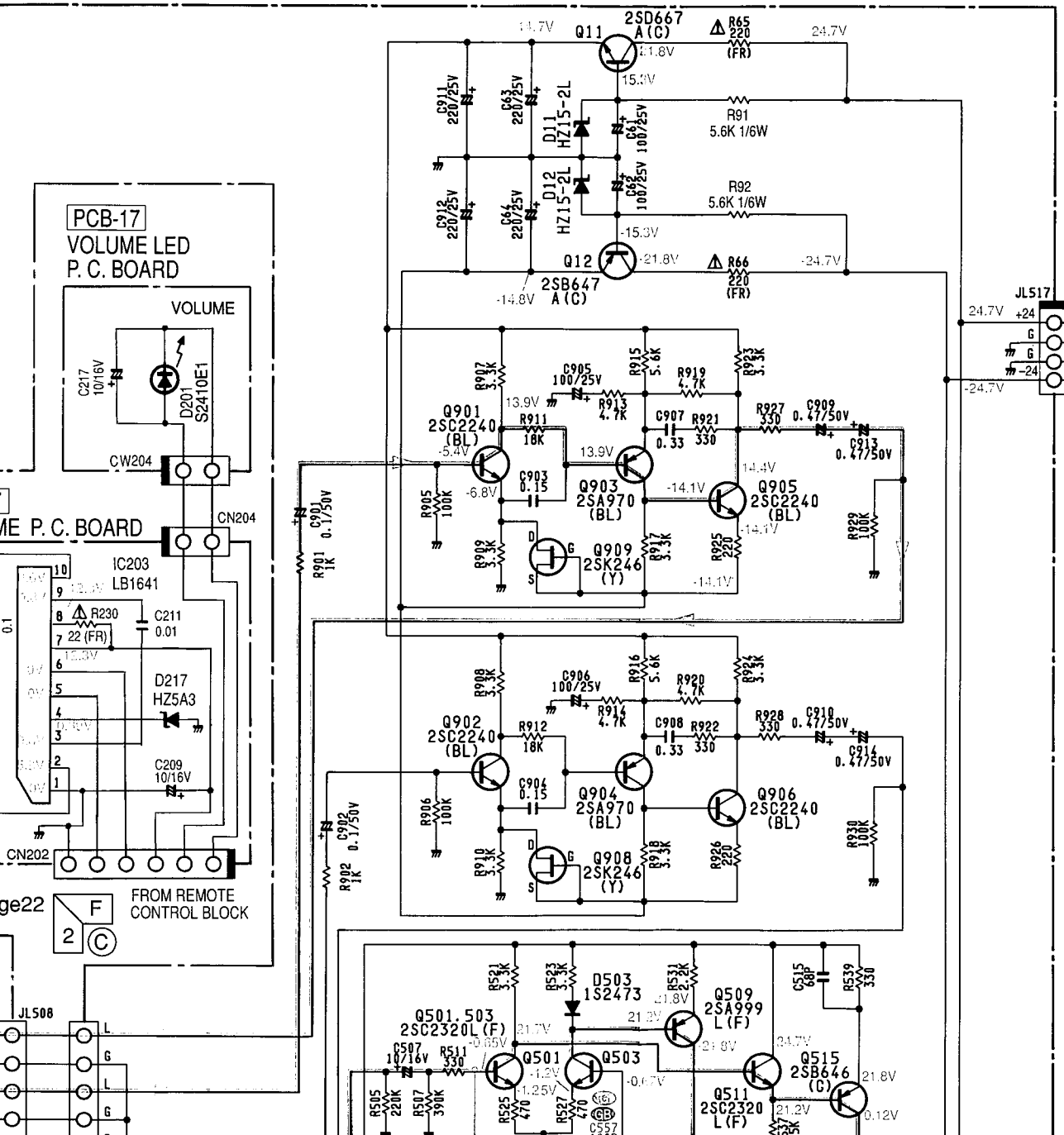

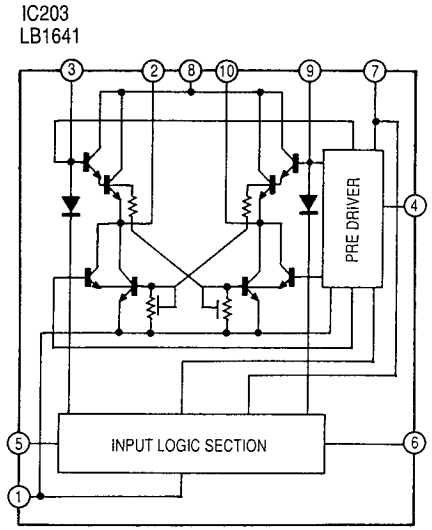

Page24 A 9 G

Page24 A 5 H

TO PCB-1
W505

NOTE:

1. ALL RESISTANCES VALUES ARE IN Ω.
   KΩ=1000Ω, MΩ=1000KΩ.
2. THE WATTAGE OF RESISTORS IS 1/2W UNLESS OTHERWISE NOTED.
3. ALL CAPACITANCES VALUES ARE IN μF UNLESS OTHERWISE NOTED. P=μμF.
4. ...V:DC VOLTAGE AT NO SIGNAL UNLESS OTHERWISE NOTED.
5. ⚠ SAFETY REQUIREMENTS COMPONENTS IN ACCORDANCE WITH PRESENT SAFETY REGULATIONS. THESE COMPONENTS MUST ONLY BE REPLACED BY ORIGINAL PARTS.

INFRARED REMOTE CONTROL SCHEMATIC DIAGRAM

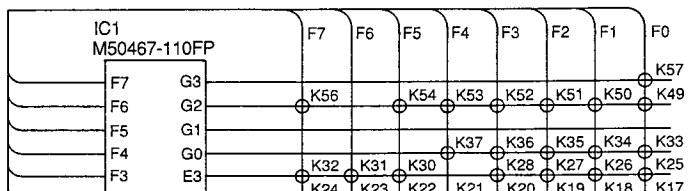

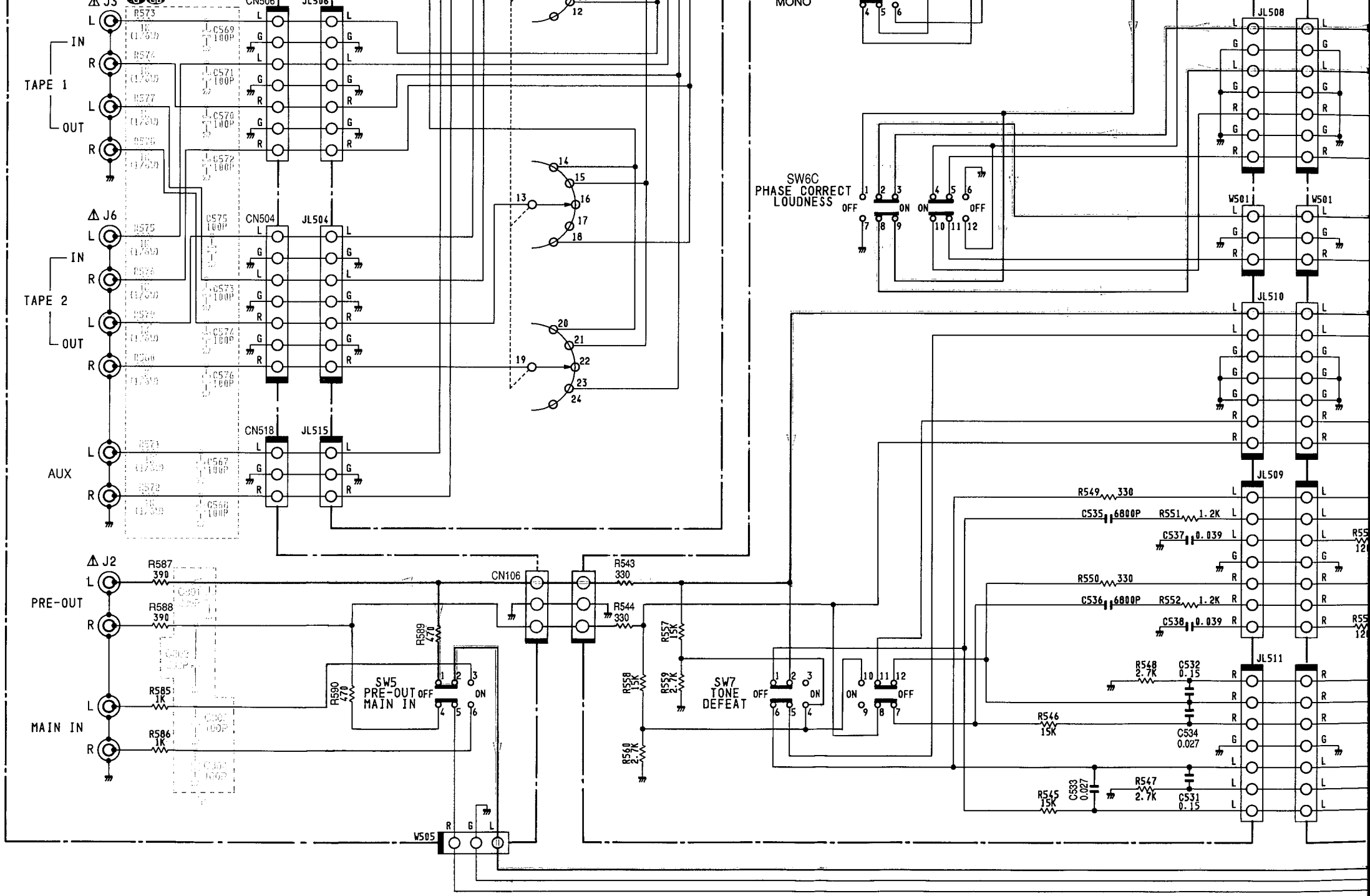
TAPE 1
IN
OUT
TAPE 2
IN
OUT
AUX
PRE-OUT
MAIN IN
J3
J6
J2
CN506
JL506
CN504
JL504
CN518
JL515
CN106
W505
W501
JL508
JL510
JL509
JL511
SW5
PRE-OUT
MAIN IN
SW7
TONE
DEFEAT
SW6C
PHASE CORRECT
LOUDNESS
MONO
OFF
ON
R587 390
R588 390
R585 1K
R586 1K
R589 470
R590 470
R543 330
R544 330
R557 15K
R558 15K
R559 2.7K
R560 2.7K
R549 330
R550 330
R551 1.2K
R552 1.2K
C535 6800P
C536 6800P
C537 0.039
C538 0.039
R548 2.7K
R546 15K
R545 15K
R547 2.7K
C532 0.15
C534 0.027
C533 0.027
C531 0.15

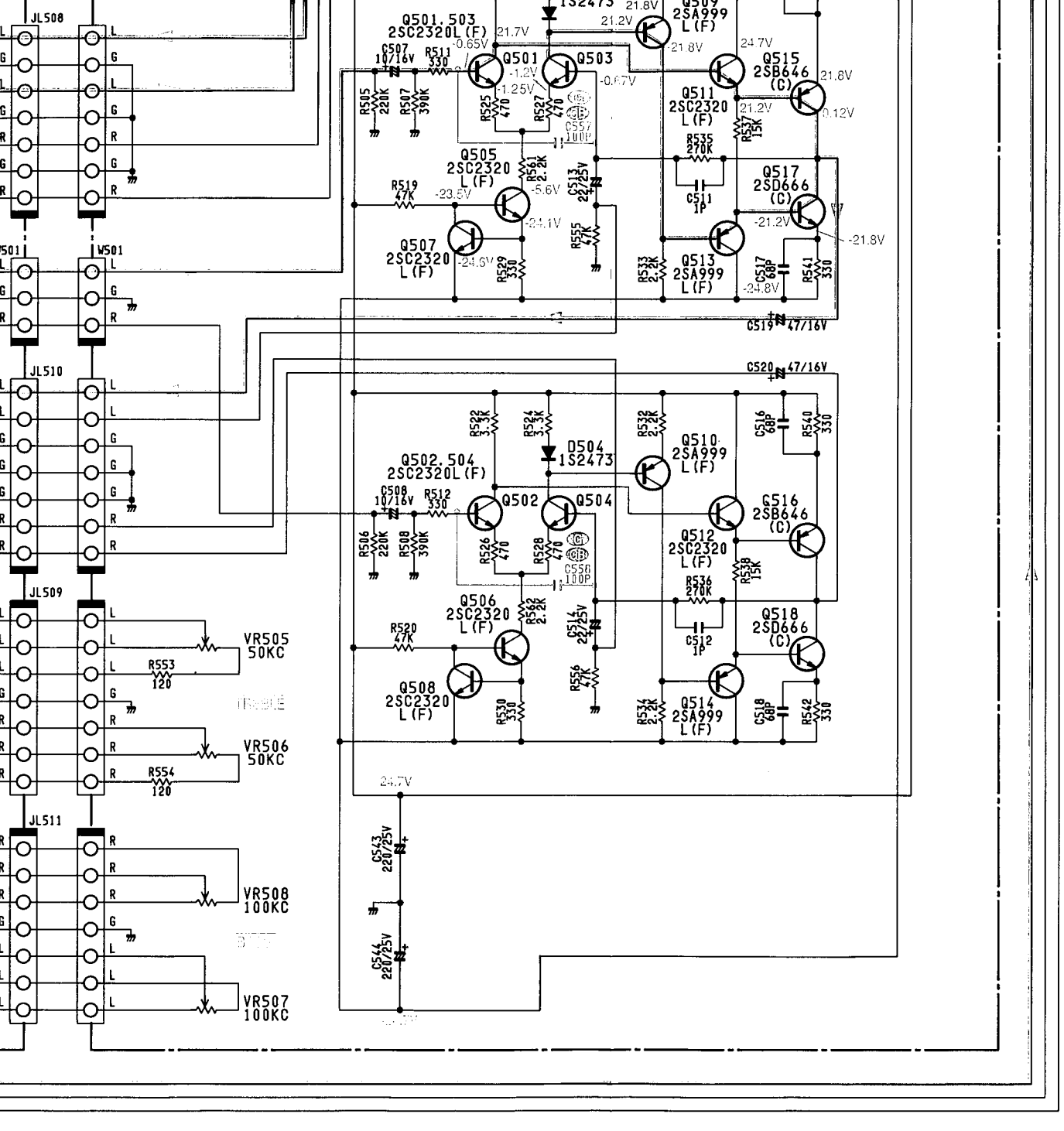

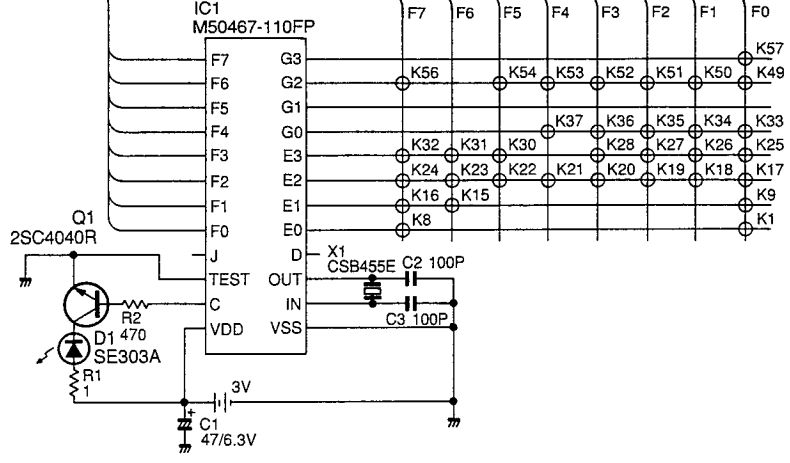

NO.	FUNCTION	NO.	FUNCTION
K1	AMP POWER	K30	CD STOP
K2		K31	CD PLAY
K3		K32	CD PAUSE
K4		K33	CD SKIP ▶▶I
K5		K34	CD I◀◀ SKIP
K6		K35	CD SEARCH ▶▶
K7		K36	CD ◀◀ SEARCH
K8	AMP VOLUME ▲	K37	CD REPEAT
K9	AMP ▼ VOLUME	K38	
K10		K39	
K11		K40	
K12		K41	
K13		K42	
K14		K43	
K15	TUNER FM	K44	
K16	TUNER AM	K45	
K17	TUNER TUNING ▲	K46	
K18	TUNER ▼ TUNING	K47	
K19	TUNER 1	K48	
K20	TUNER 2	K49	CASSETTE PLAY
K21	TUNER 3	K50	CASSETTE REV. PLAY
K22	TUNER 4	K51	CASSETTE STOP
K23	TUNER 5	K52	CASSETTE F. FWD
K24	TUNER 6	K53	CASSETTE REW
K25	TUNER 7	K54	CASSETTE REC/PAUSE
K26	TUNER 8	K55	
K27	TUNER SHIFT	K56	CASSETTE SKIP ▶▶I
K28	TUNER SEEK	K57	CASSETTE I◀◀ SKIP
K29			

NOTE : Infrared Remote Control parts are not available.
Schematic diagram is supplied for reference only.

SCHEMATIC DIAGRAM (4)

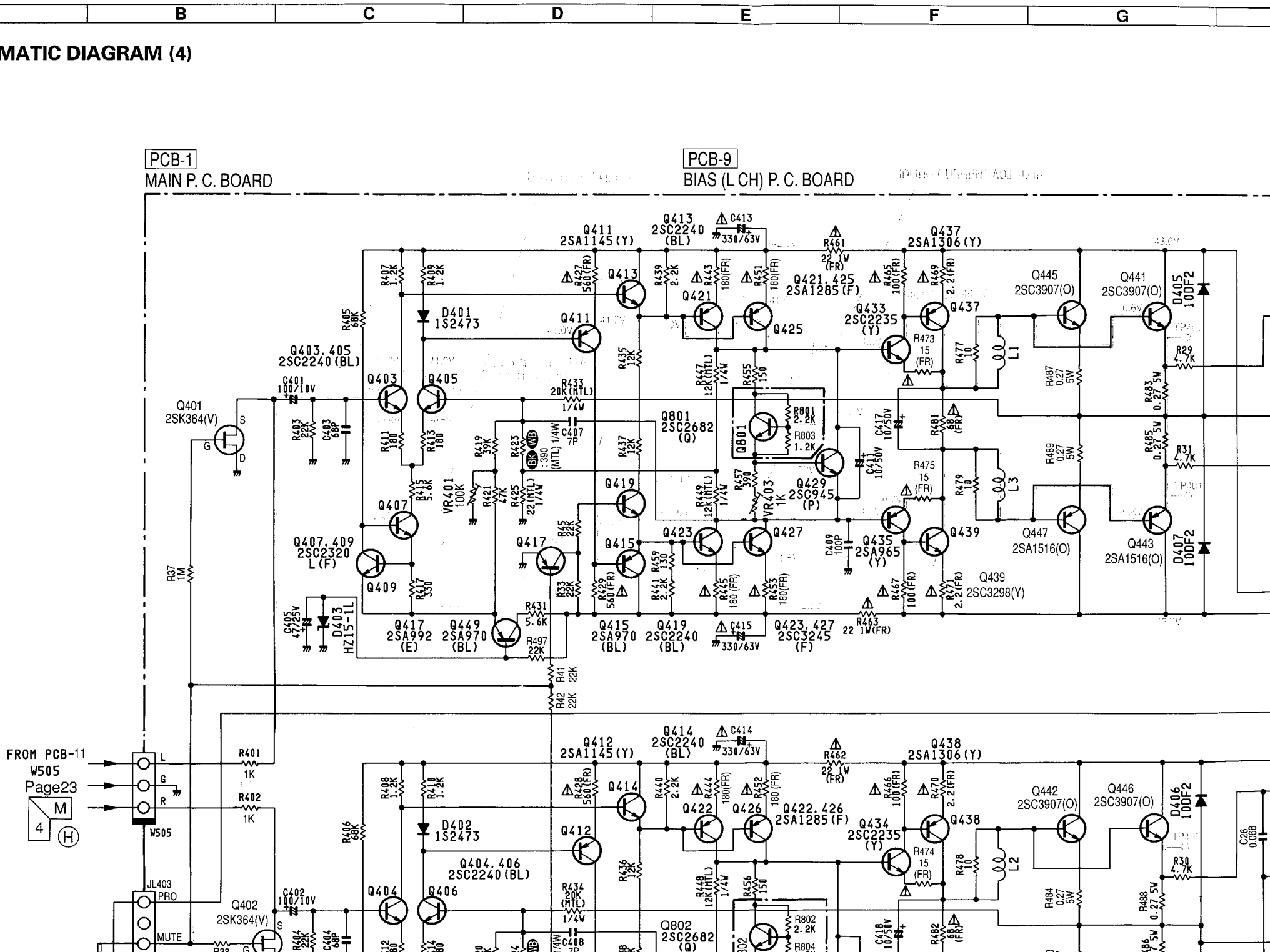

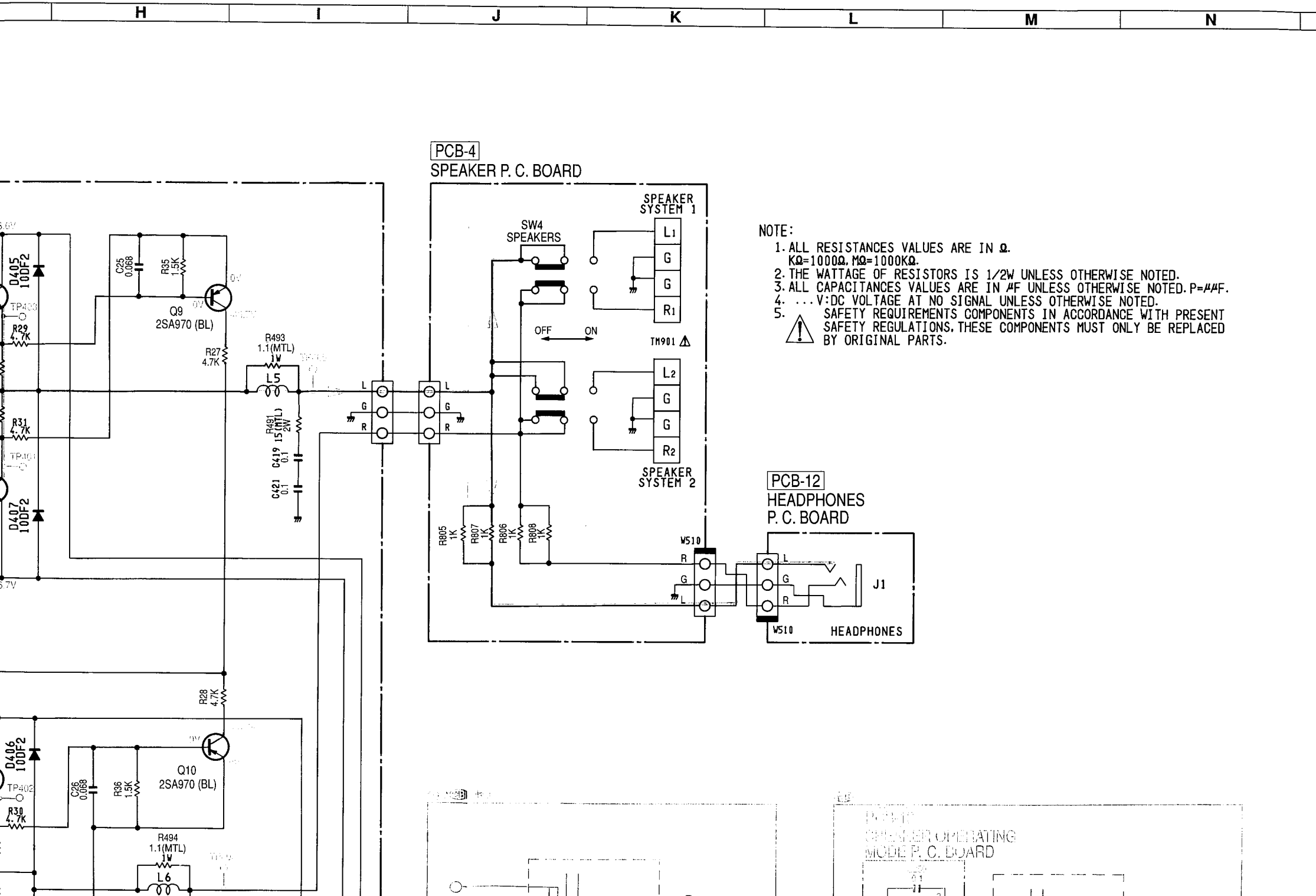

NOTE:

1. ALL RESISTANCES VALUES ARE IN Ω.
   KΩ=1000Ω, MΩ=1000KΩ.
2. THE WATTAGE OF RESISTORS IS 1/2W UNLESS OTHERWISE NOTED.
3. ALL CAPACITANCES VALUES ARE IN μF UNLESS OTHERWISE NOTED. P=μμF.
4. ...V:DC VOLTAGE AT NO SIGNAL UNLESS OTHERWISE NOTED.
5. ⚠ SAFETY REQUIREMENTS COMPONENTS IN ACCORDANCE WITH PRESENT SAFETY REGULATIONS. THESE COMPONENTS MUST ONLY BE REPLACED BY ORIGINAL PARTS.

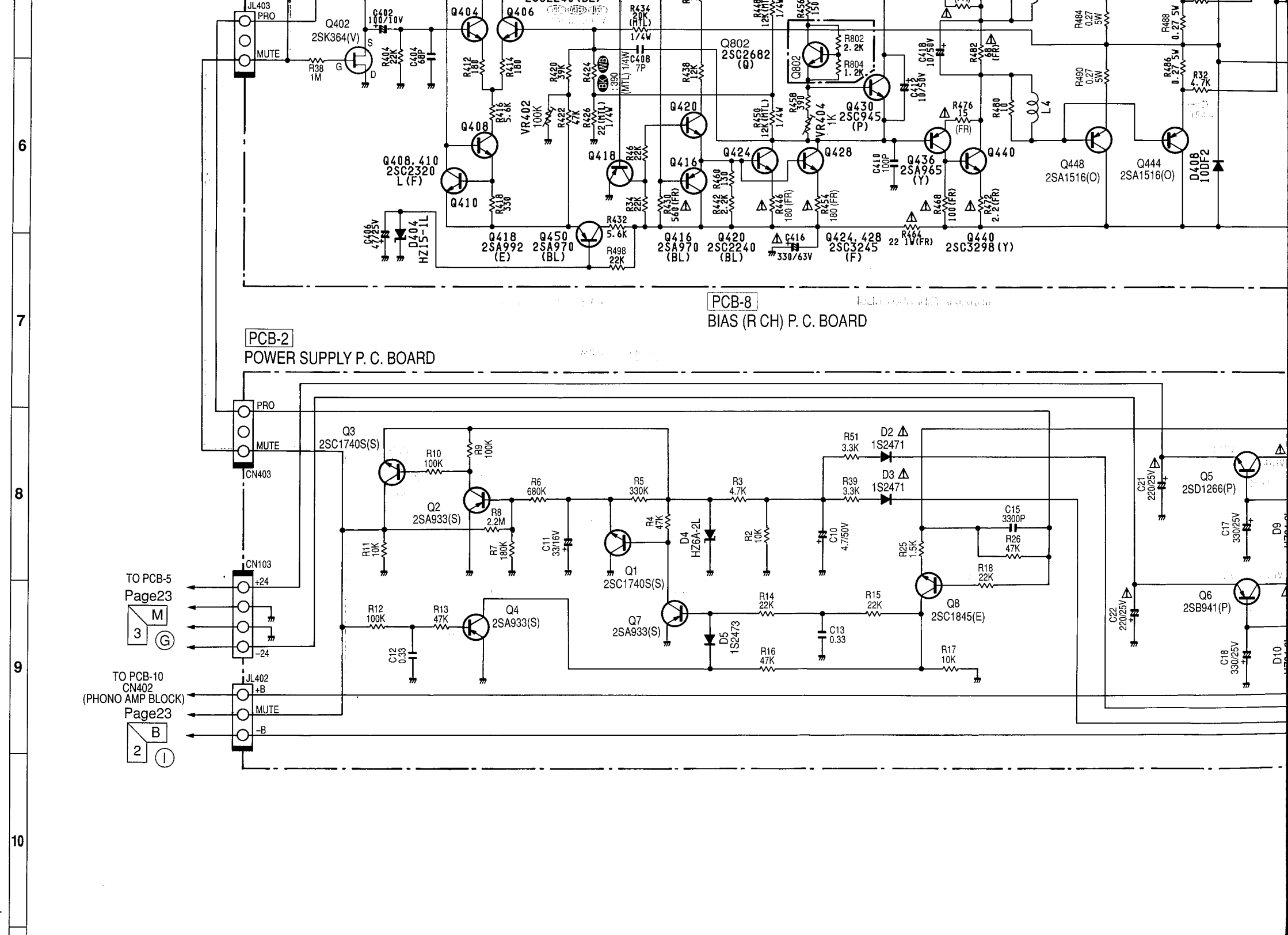
PCB-8
BIAS (R CH) P. C. BOARD
PCB-2
POWER SUPPLY P. C. BOARD
JL403
PRO
MUTE
Q402
2SK364(V)
Q404
Q406
Q408
Q408, 410
2SC2320
L(F)
Q410
Q418
2SA992
(E)
Q450
2SA970
(BL)
Q416
2SA970
(BL)
Q420
2SC2240
(BL)
Q424, 428
2SC3245
(F)
Q430
2SC945
(P)
Q436
2SA965
(Y)
Q440
2SC3298(Y)
Q448
2SA1516(O)
Q444
2SA1516(O)
D408
10DF2
D404
HZ15-1L
Q802
2SC2682
(Q)
VR402
100K
VR404
1K
L4
CN403
Q3
2SC1740S(S)
Q2
2SA933(S)
Q1
2SC1740S(S)
Q7
2SA933(S)
Q4
2SA933(S)
Q8
2SC1845(E)
Q5
2SD1266(P)
Q6
2SB941(P)
D2
1S2471
D3
1S2471
D4
HZ6A-2L
D5
1S2473
CN103
+24
-24
TO PCB-5
Page23
M
3
G
JL402
+B
MUTE
-B
TO PCB-10
CN402
(PHONO AMP BLOCK)
Page23
B
2
I

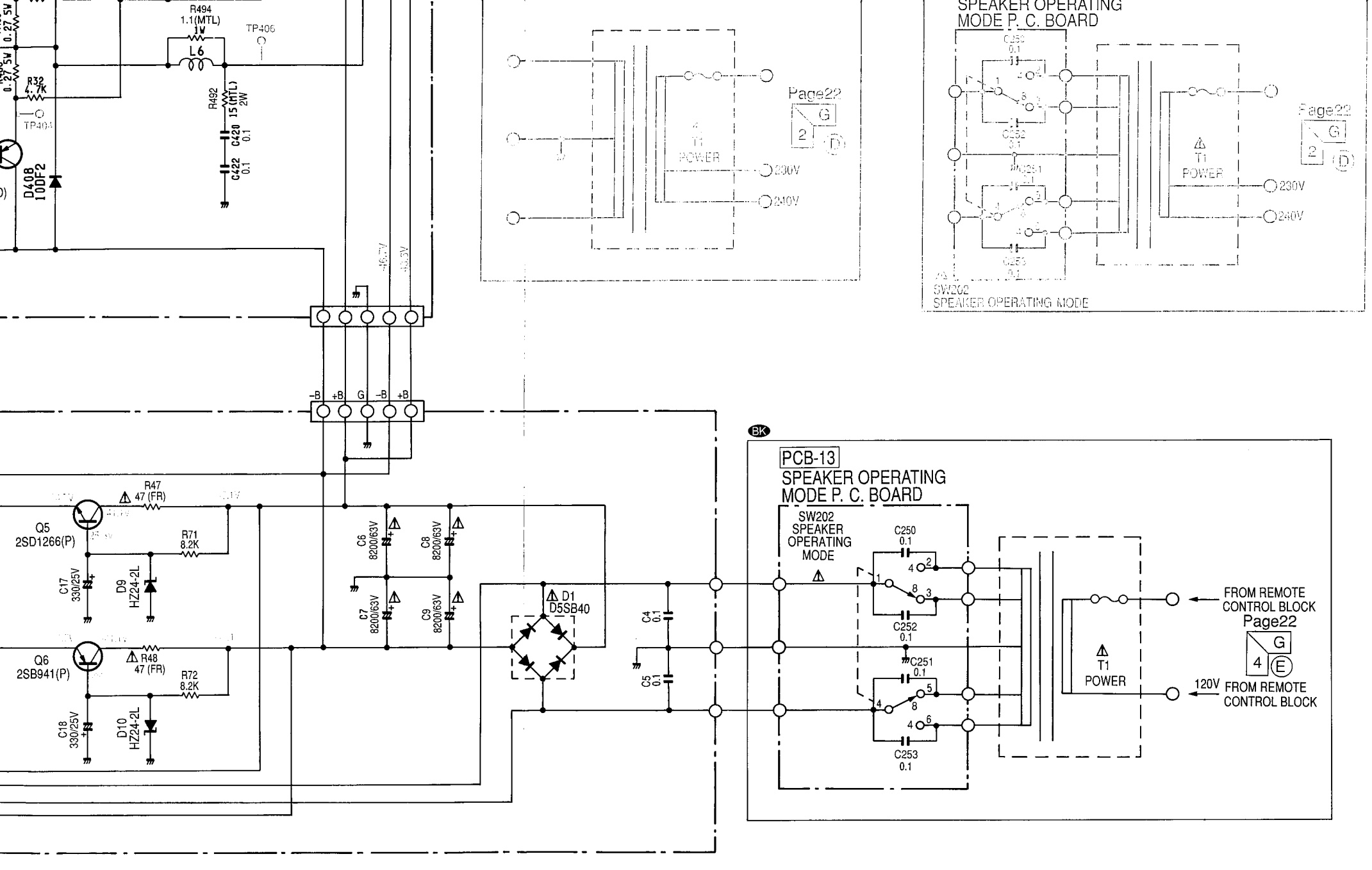
R494
1.1(MTL)
1W
L6
TP406
R32
4.7K
TP404
R492
15(MTL)
2W
C420
0.1
C422
0.1
D408
10DF2
+6.7V
+6.3V
-B
+B
G
-B
+B
Page22
G
2
D
T1
POWER
230V
240V
SPEAKER OPERATING
MODE P. C. BOARD
C250
0.1
C252
0.1
C251
0.1
C253
0.1
SW202
SPEAKER OPERATING MODE
BK
PCB-13
SPEAKER OPERATING
MODE P. C. BOARD
SW202
SPEAKER
OPERATING
MODE
R47
47 (FR)
Q5
2SD1266(P)
R71
8.2K
C17
330/25V
D9
HZ24-2L
Q6
2SB941(P)
R48
47 (FR)
R72
8.2K
C18
330/25V
D10
HZ24-2L
C6
8200/63V
C8
8200/63V
C7
8200/63V
C9
8200/63V
D1
D5SB40
C4
0.1
C5
0.1
FROM REMOTE
CONTROL BLOCK
Page22
G
4
E
120V
FROM REMOTE
CONTROL BLOCK

WIRING DIAGRAM

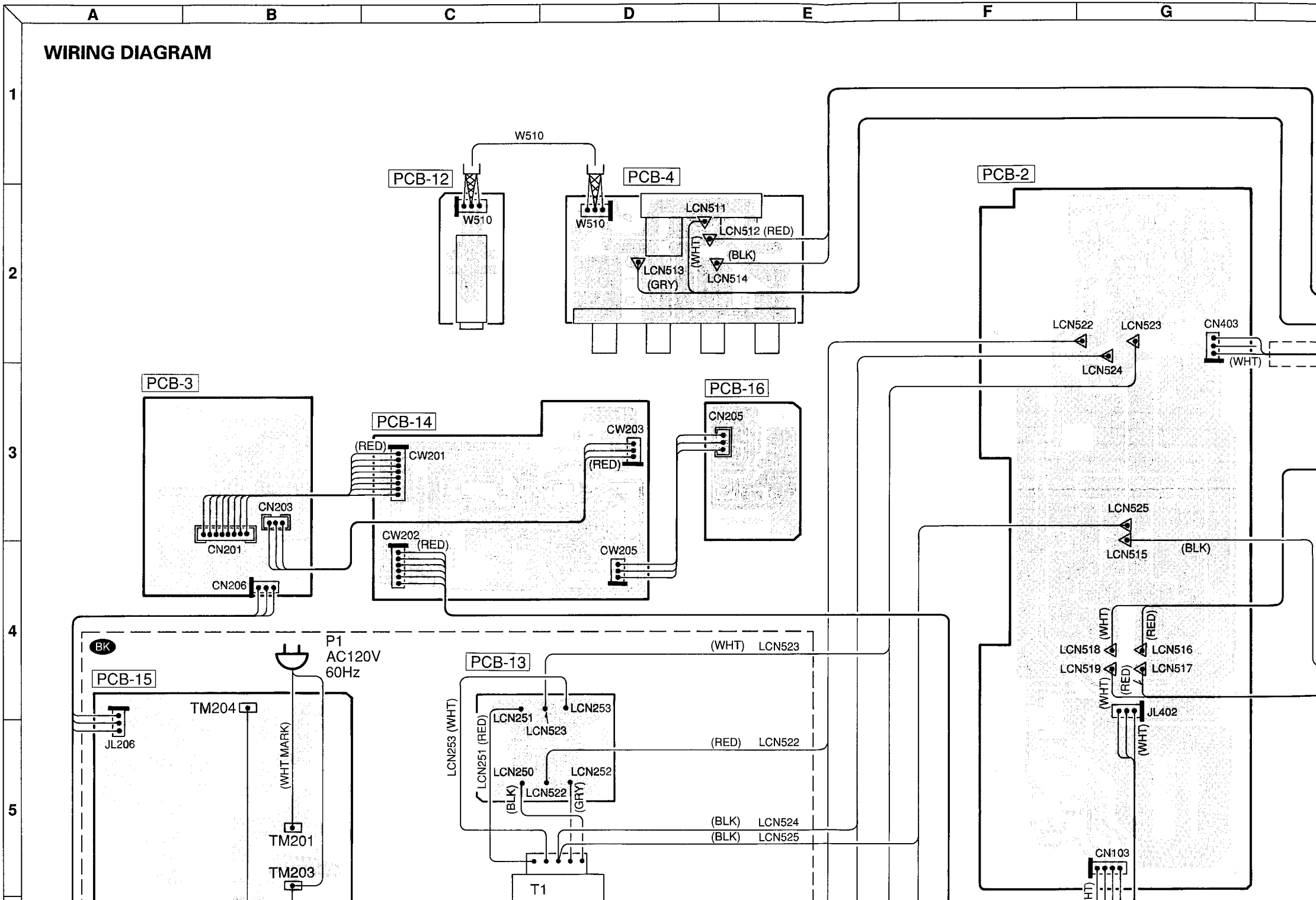

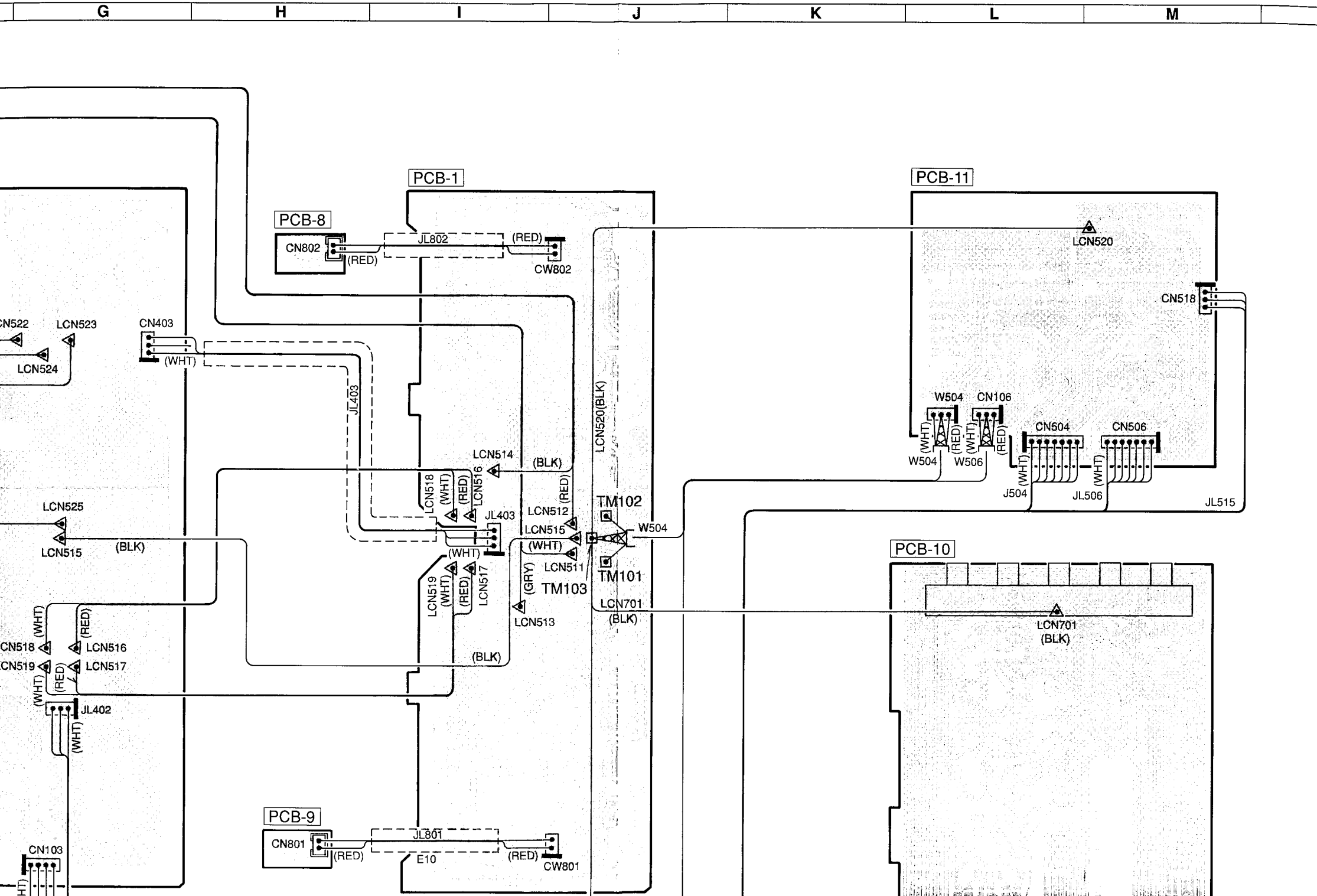
G
H
I
J
K
L
M
PCB-1
PCB-8
PCB-9
PCB-10
PCB-11
CN802
JL802
(RED)
CW802
CN403
(WHT)
JL403
LCN522
LCN523
LCN524
LCN525
LCN515
(BLK)
LCN514
LCN518
LCN516
LCN519
LCN517
LCN512
LCN511
LCN513
(GRY)
TM102
TM101
TM103
W504
LCN520(BLK)
LCN701
(BLK)
CN518
CN519
JL402
CN103
CN801
JL801
E10
CW801
LCN520
CN106
W506
CN504
CN506
J504
JL506
JL515

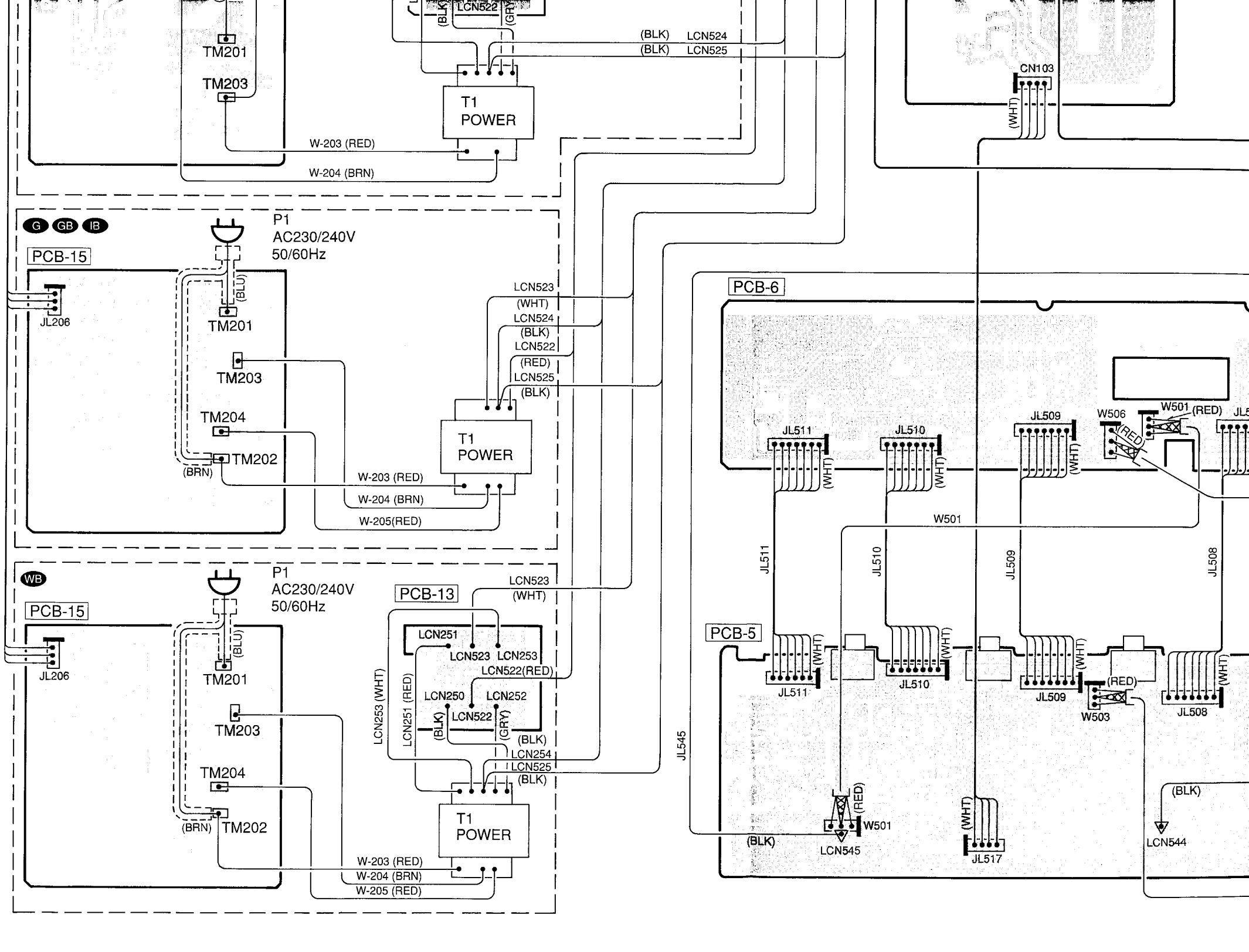
TM201
TM203
LCN522
(BLK)
(GRY)
(BLK) LCN524
(BLK) LCN525
T1
POWER
W-203 (RED)
W-204 (BRN)
CN103
(WHT)
G GB IB
PCB-15
P1
AC230/240V
50/60Hz
JL206
(BLU)
TM201
TM203
TM204
TM202
(BRN)
LCN523
(WHT)
LCN524
(BLK)
LCN522
(RED)
LCN525
(BLK)
T1
POWER
W-203 (RED)
W-204 (BRN)
W-205(RED)
WB
PCB-15
P1
AC230/240V
50/60Hz
PCB-13
LCN523
(WHT)
LCN251
LCN523 LCN253
LCN522(RED)
LCN250 LCN252
LCN522
LCN253 (WHT)
LCN251 (RED)
(BLK)
(GRY)
(BLK)
LCN254
LCN525
(BLK)
T1
POWER
W-203 (RED)
W-204 (BRN)
W-205 (RED)
PCB-6
JL511
JL510
JL509
W506
W501 (RED)
(WHT)
(RED)
W501
JL511
JL510
JL509
JL508
PCB-5
JL511
JL510
JL509
W503
JL508
JL545
(RED)
W501
(BLK)
LCN545
(WHT)
JL517
(BLK)
LCN544

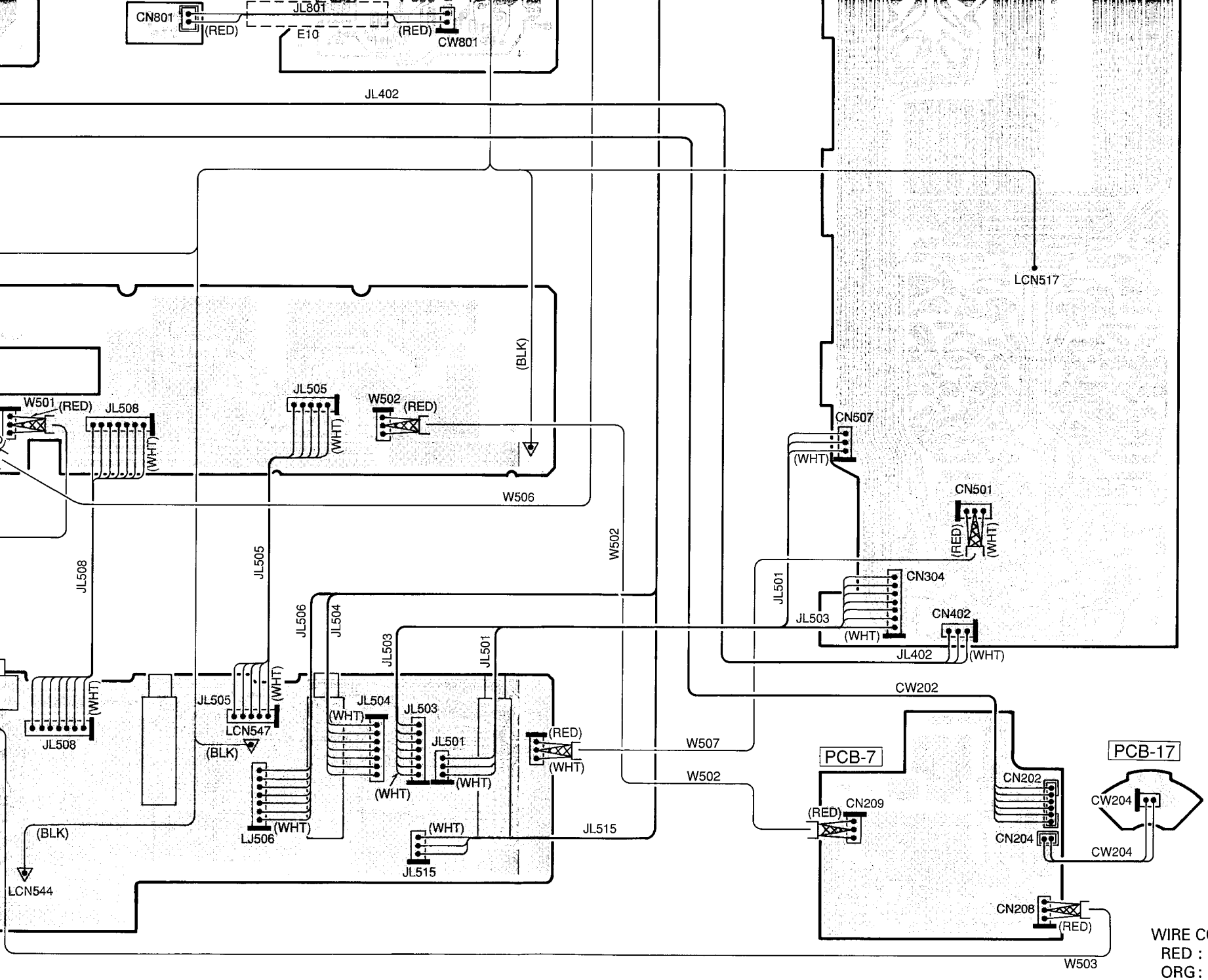

WIRE COLOR ABBREVIATIONS

RED : Red	YEL : Yellow
ORG : Orange	PUP : Purple
BLU : Blue	PIK : Pink
WHT : White	BRN : Brown
BLK : Black	